MAHONING AVE BRIDGE

BRIDGE WIDTH: 67.2

OVERALL LENGTH: 386.86

ZM- 21.1

PIER OVERVIEW

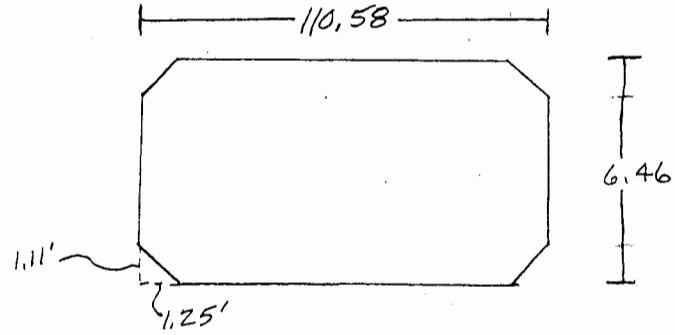

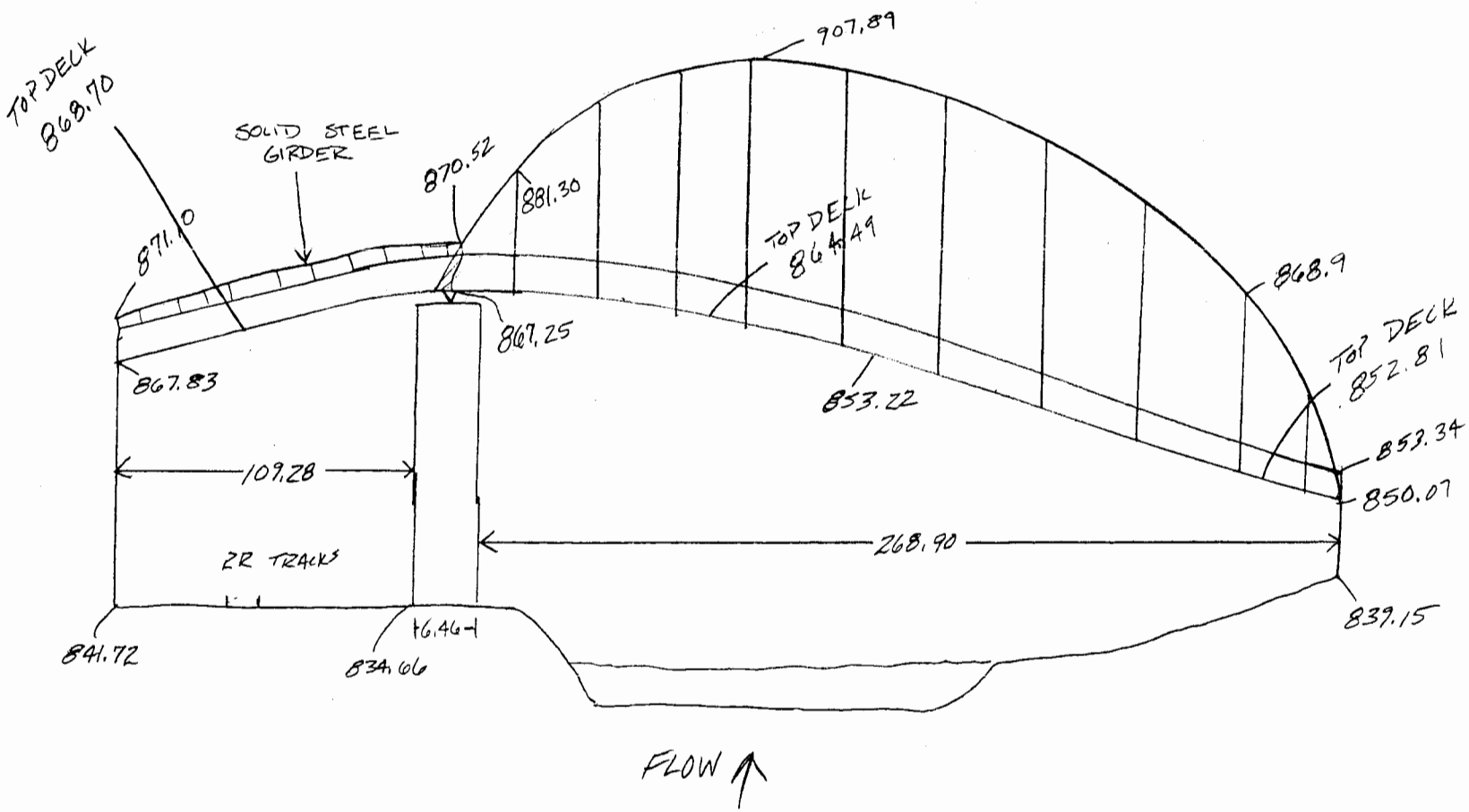

PROJECT

SHEET ___ OF ___

SUBJECT

DATE

JOB NO.

BY