RR BRIDGE @ CELRP 23.0 at CRESCENT ST. DAM
BRIDGE SKEWED
BRIDGE WIDTH: 30.14
OVERALL LENGTH = 570.10

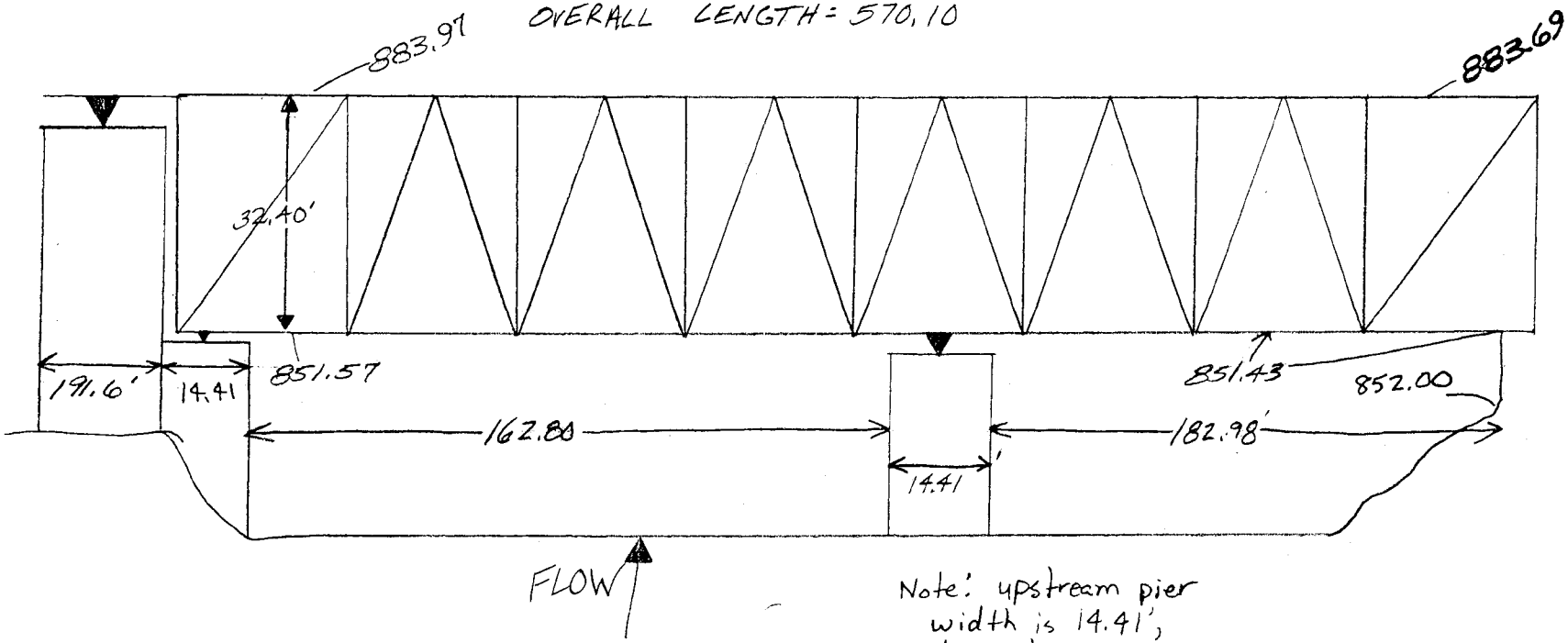

Note: upstream pier width is 14.41', downstream pier width is 19.41

PIER OVER VIEW

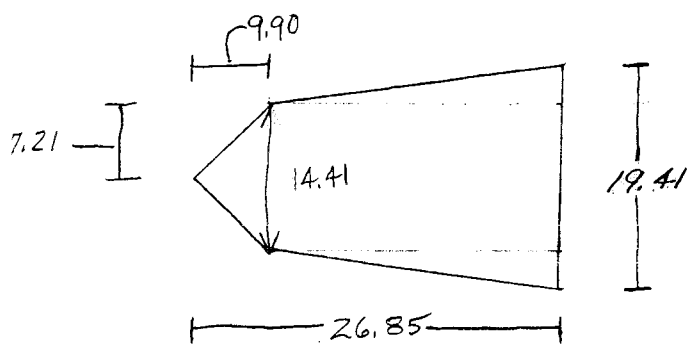

PROJECT
SUBJECT
SHEET ___ OF ___
DATE
JOB NO.
BY