RR BRIDGE @ CELRP 25.8 D/S of I-80 BRIDGE (CP 02-09-31)

BRIDGE WIDTH = 11.83

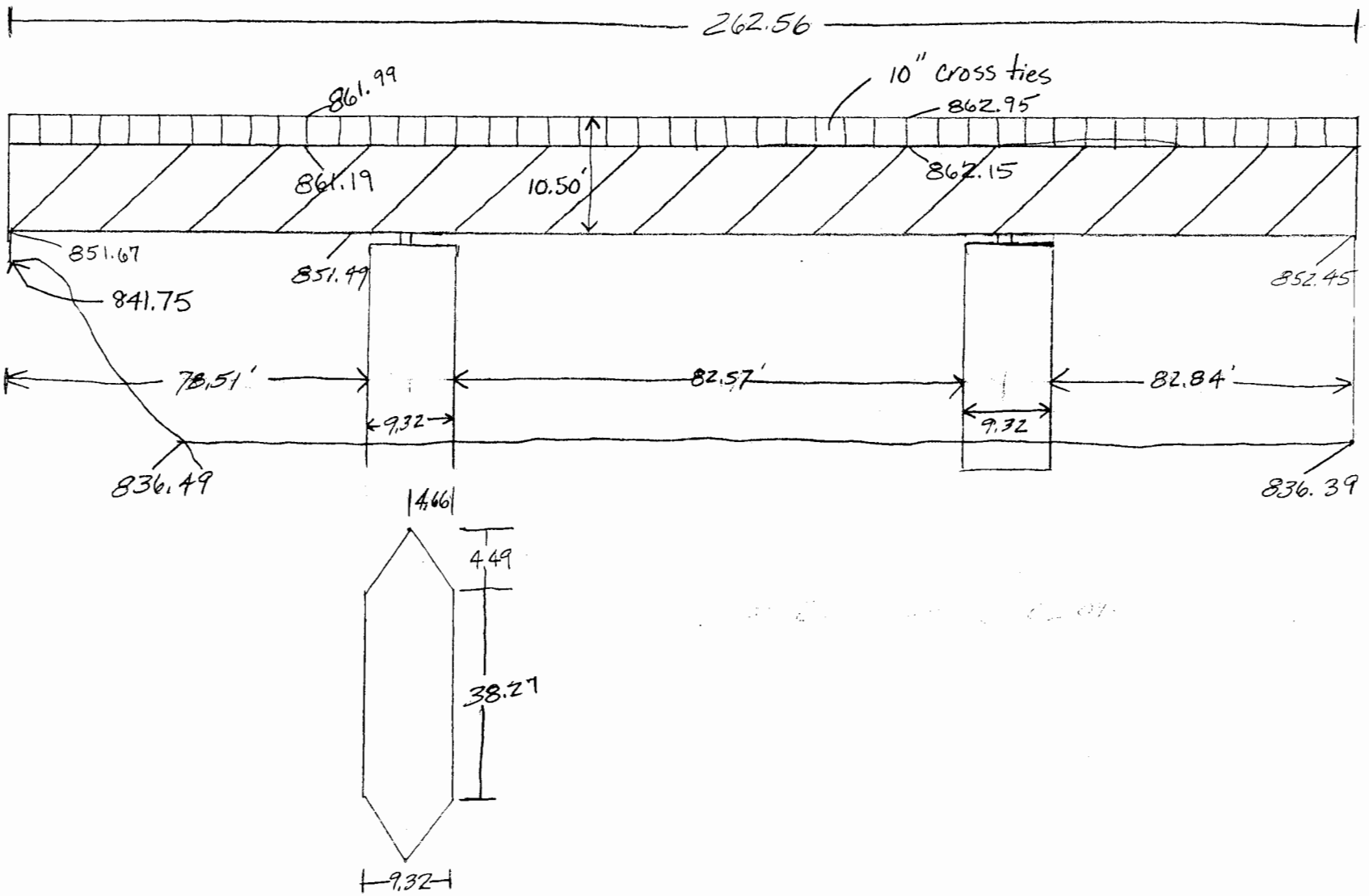

EXAMPLE PIER OVERVIEW

PROJECT ____ SHEET ____ OF ____

SUBJECT ____ DATE ____

JOB NO ____

BY ____