R×R BRIDGE @ CELRP 17.9

BRIDGE WIDTH: 71.2

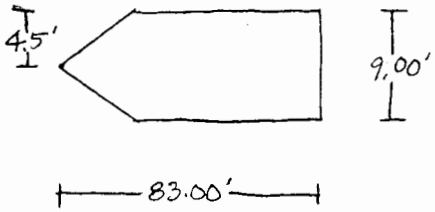

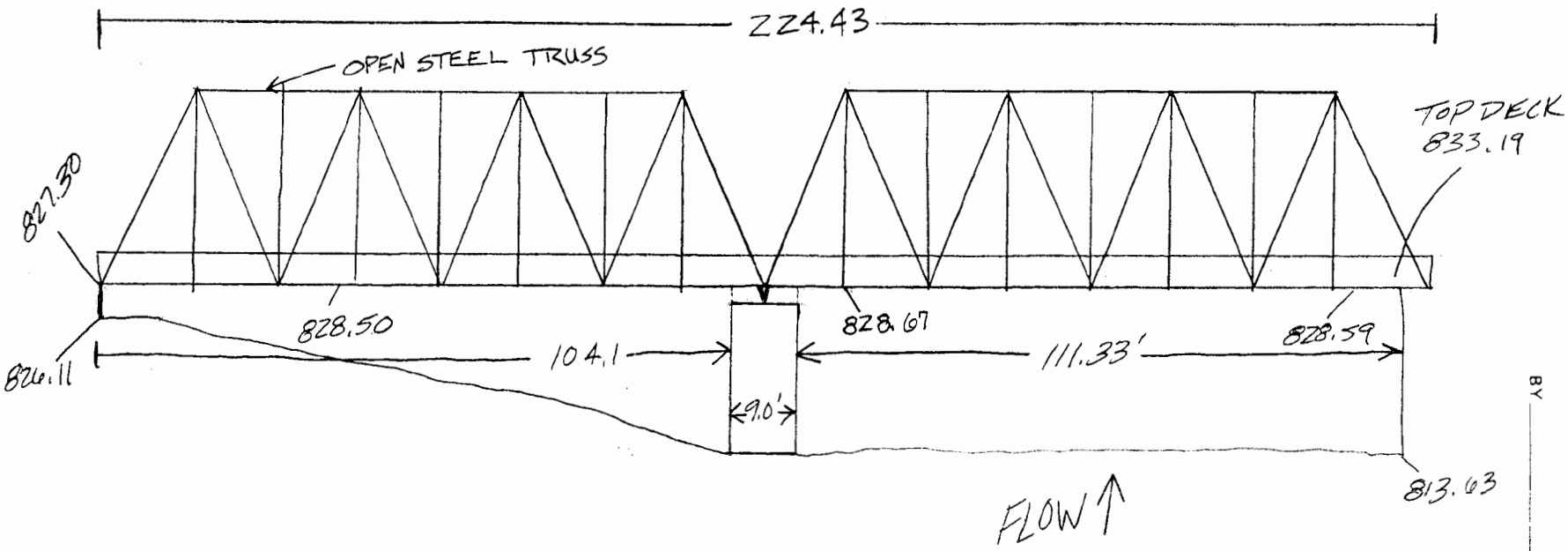

PROJECT

SUBJECT

SHEET ___ OF ___

DATE

JOB NO.

BY