ABANDONED RR BRIDGE RM 18.00
UPSTREAM TWIN BRIDGE

NOTE: NO DECK OPEN STEEL GIRDERS
BRIDGE SKEWED
BRIDGE WIDTH = 32.2

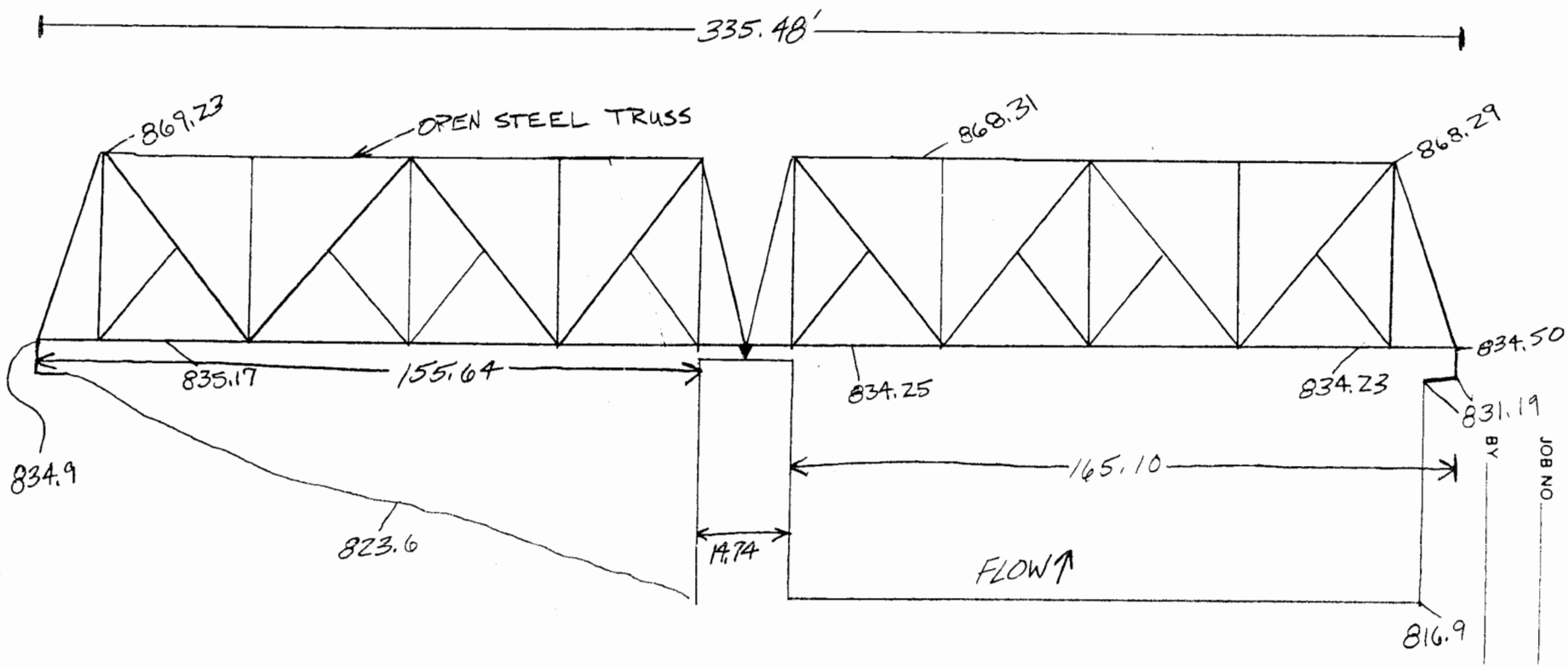

PROJECT
SUBJECT
SHEET ___ OF ___
DATE
BY
JOB NO.