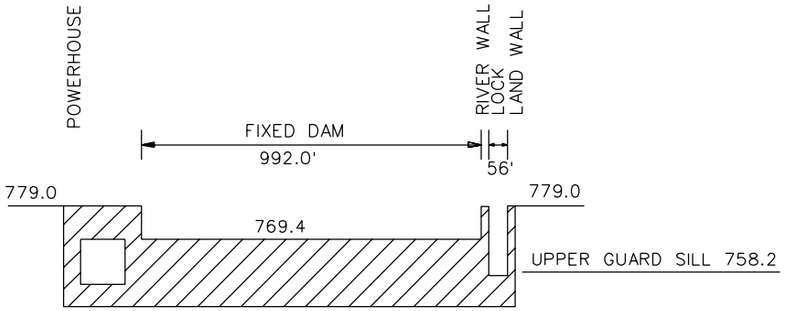

LOCK & DAM NO. 6

NAVIGATION SUSPENDED - UPPER GAGE 17.0

TELEPHONE NO. 412-295-3775

LOCK & DAM NO. 6	
UPPER GAGE	
ZERO EL.	760.4
N.P. READS	9.0'
LOWER GAGE	
ZERO EL.	748.6
N.P. READS	9.0'

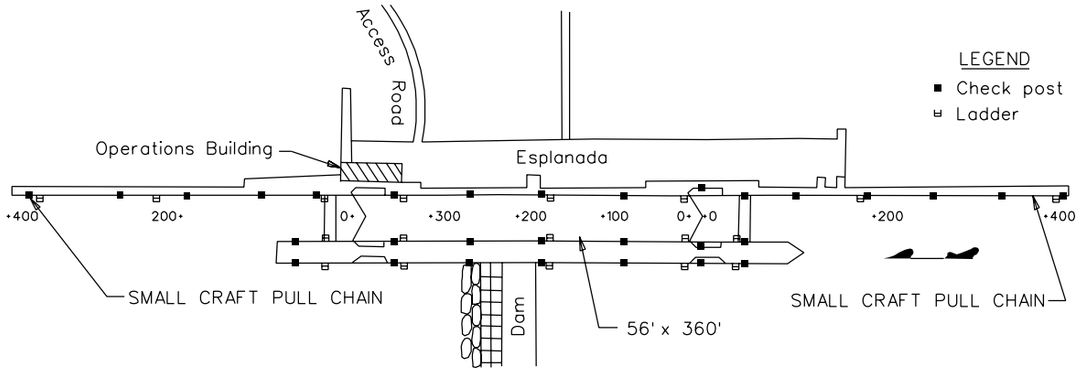

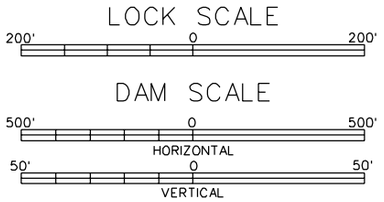

ELEVATIONS LOOKING DOWNSTREAM

ALLEGHENY RIVER CHART 12