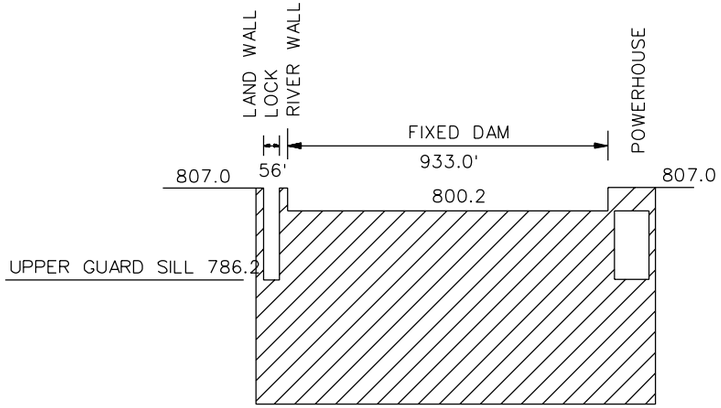

LOCK & DAM NO. 8

NAVIGATION SUSPENDED - UPPER GAGE 14.0

TELEPHONE NO. 724-548-5119

AERIAL POWER CROSSINGS

CROSSING	MILE	ELEVATION	CLEARANCE
1	52.7	906.6	106.4'
1	52.8	897.1	96.9'

LOCK & DAM NO. 8	
UPPER POOL EL.	800.2
LOWER POOL EL.	782.4
UPPER GAGE	
ZERO EL.	791.2
N.P. READS	9.0'
LOWER GAGE	
ZERO EL.	773.4
N.P. READS	9.0'

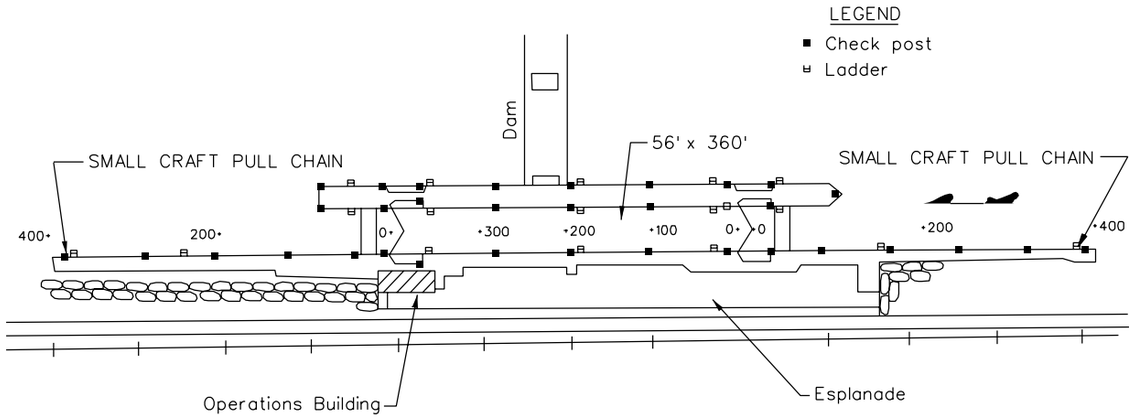

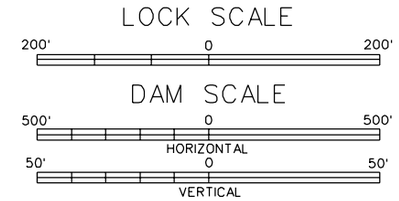

ELEVATIONS LOOKING DOWNSTREAM
ALLEGHENY RIVER, CHART 17