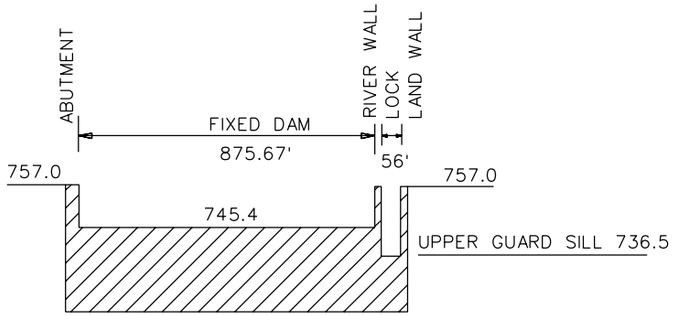

LOCK & DAM NO. 4

LOCK & DAM NO. 4	
UPPER POOL EL.	745.4
LOWER POOL EL.	734.8
UPPER GAGE	
ZERO EL.	736.4
N.P. READS	9.0'
LOWER GAGE	
ZERO EL.	725.8
N.P. READS	9.0'

NAVIGATION SUSPENDED - UPPER GAGE 18.0'

TELEPHONE NO. 724-224-2666

AERIAL POWER CROSSINGS

CROSSING	MILE	ELEVATION	CLEARANCE
1	23.1	802.5	67.7'
1	23.3	809.2	74.4'
1	23.4	812.8	78.0'
1	24.2	814.0	68.6'

NATRONA

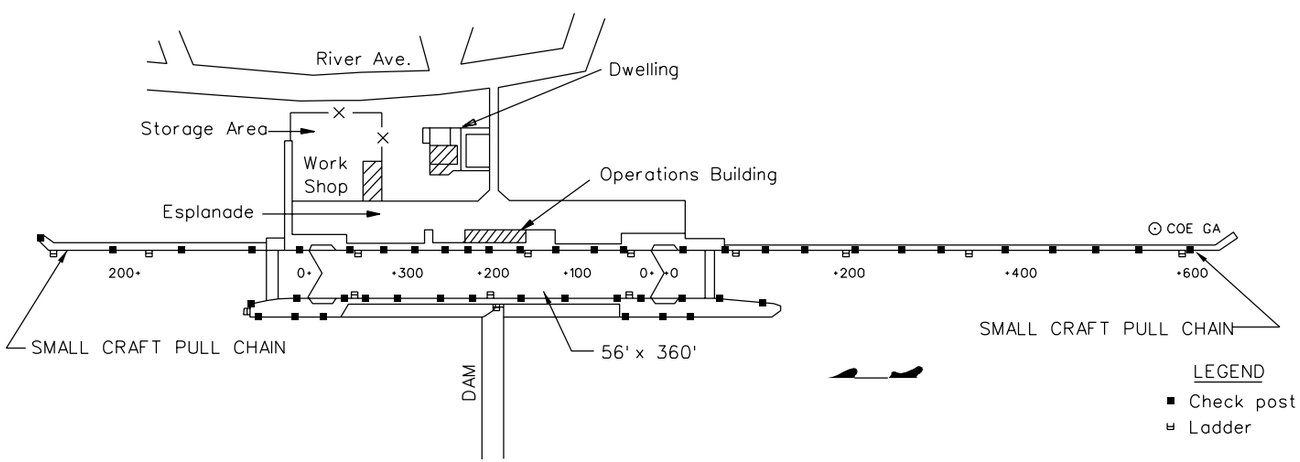

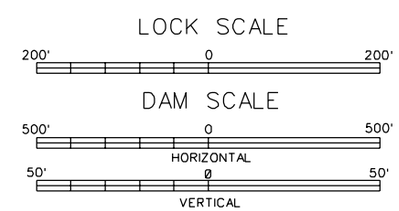

ELEVATIONS LOOKING DOWNSTREAM
ALLEGHENY RIVER CHART 8