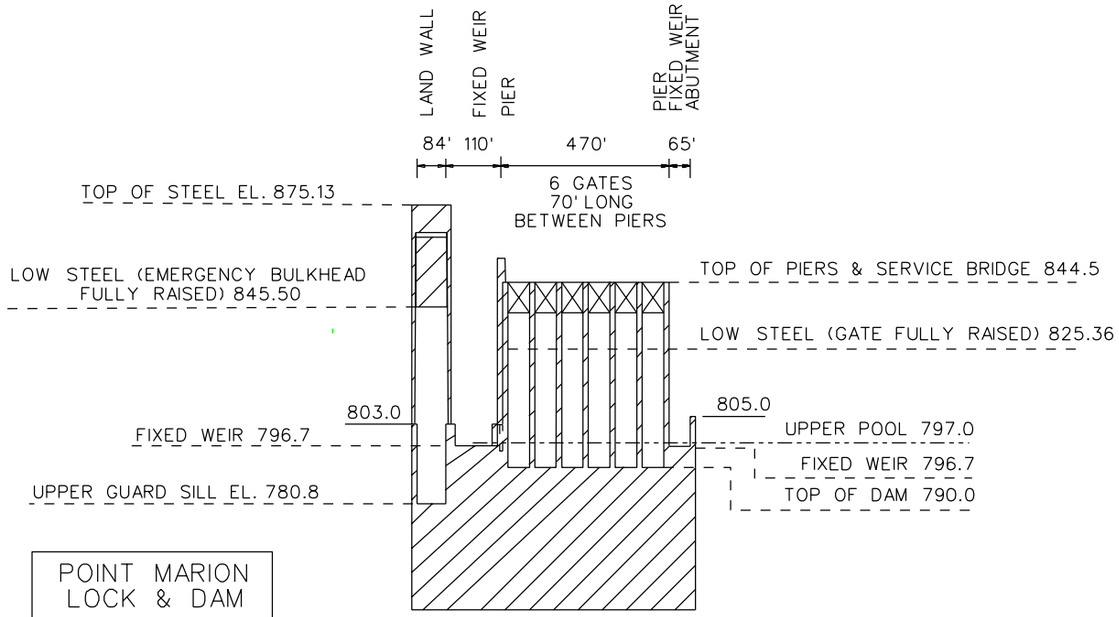

POINT MARION LOCK & DAM	
UPPER POOL EL.	797.0
LOWER POOL EL.	778.0
UPPER GAGE	
ZERO EL.	788.0
N.P. READS	9.0'
LOWER GAGE	
ZERO EL.	769.0
N.P. READS	9.0'

POINT MARION LOCK & DAM

NAVIGATION SUSPENDED - UPPER GAGE 11.5

TELEPHONE NO. 724-725-5289

AERIAL POWER CROSSINGS

CROSSING	MILE	ELEVATION	CLEARANCE
1	88.6	890.4	112.4'
1	90.1	845.7	67.7'

4

POINT MARION HIGHWAY BRIDGE CHANNEL SPAN

ELEVATION OF LOW STEEL	XXX.X
VERTICAL CLEARANCE AT POOL STAGE	XX.X'
HORIZONTAL CLEARANCE	XXX.X'

LEGEND

- ▲ Floating mooring bit
- ■ Check post
- ⊟ Ladder

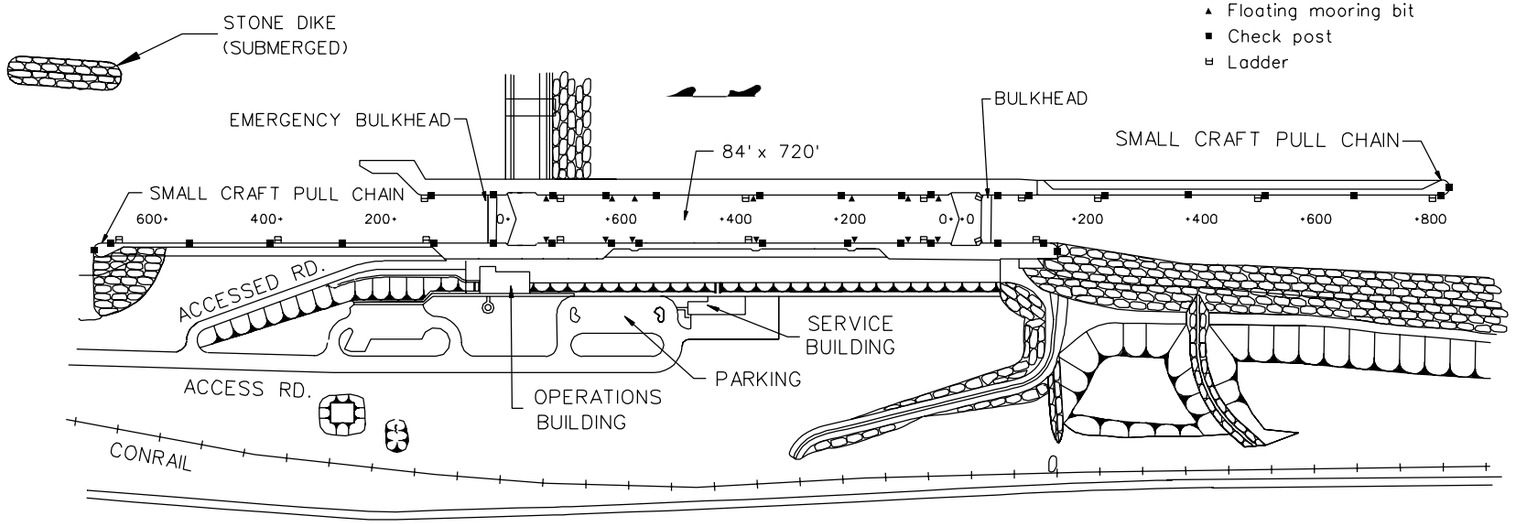

BRIDGE SCALE

400' 0 400'

LOCK SCALE

300' 0 300'

DAM SCALE

500' 0 500'

HORIZONTAL

50' 0 50'

VERTICAL

ELEVATIONS LOOKING DOWNSTREAM

MONONGAHELA RIVER CHART 25