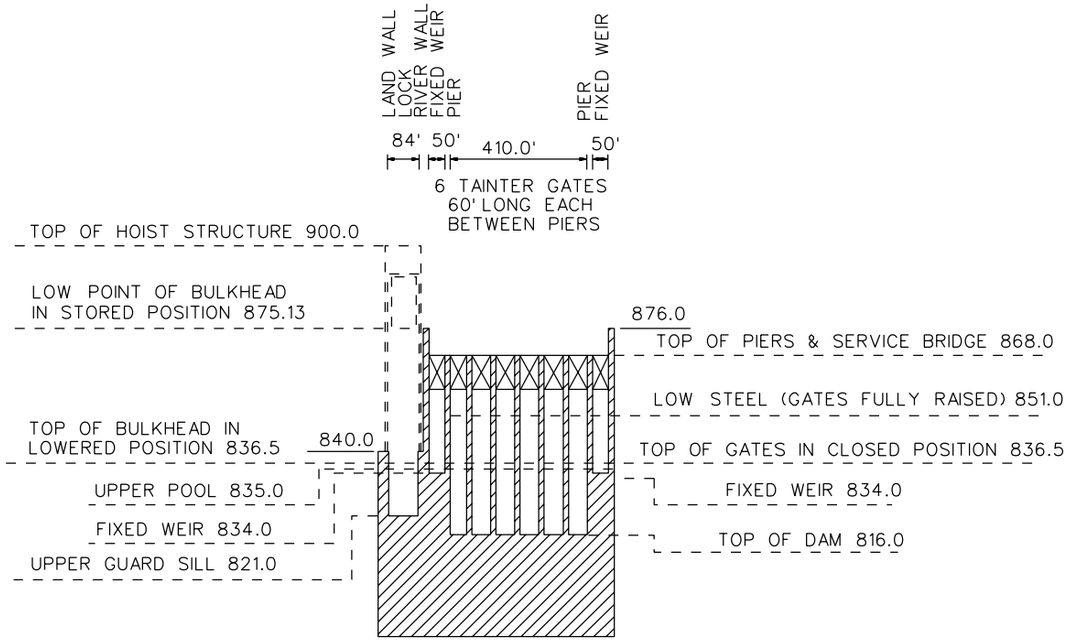

HILDEBRAND LOCK & DAM

NAVIGATION SUSPENDED - UPPER GAGE 12.0

TELEPHONE NO. 304-983-2300

HILDEBRAND LOCK & DAM	
UPPER POOL EL.	835.0
LOWER POOL EL.	814.0
UPPER GAGE	
ZERO EL.	826.1
N.P. READS	9.0'
LOWER GAGE	
ZERO EL.	804.9
N.P. READS	9.0'

AERIAL POWER CROSSINGS

CROSSING	MILE	ELEVATION	CLEARANCE
1	103.9	868.2	54.2'
1	106.2	917.0	103.0'
1	107.9	973.0	159.0'

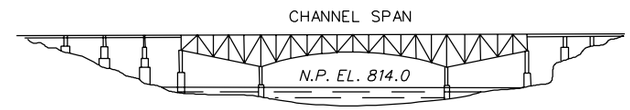

3

INTERSTATE 79 HIGHWAY BRIDGE
CHANNEL SPAN

ELEVATION LOW POINT OF STEEL	900.0
VERTICAL CLEARANCE AT POOL STAGE	86.0'
HORIZONTAL CLEARANCE	460.0'

LEGEND

- ▲ Floating mooring bit
- ■ Check post
- ⊔ Ladder

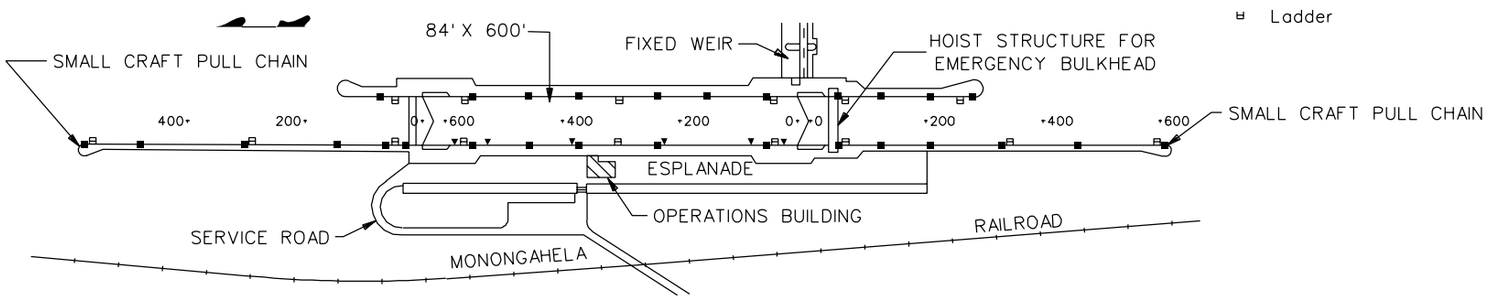

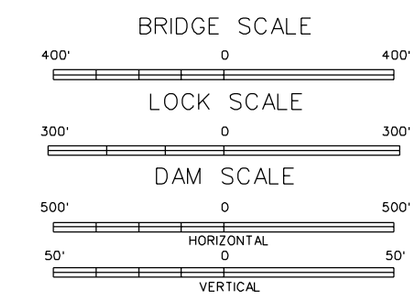

ELEVATIONS LOOKING DOWNSTREAM

MONONGAHELA RIVER CHART 29