STREAM ID: S-JHS-22

PHYSICAL CHARACTERIZATION/WATER QUALITY FIELD DATA SHEET

WATERSHED FEATURES

PREDOMINANT SURROUNDING LANDUSE
- [x] FOREST
- [ ] FIELD/PASTURE
- [ ] AGRICULTURAL
- [ ] RESIDENTIAL
- [ ] COMMERCIAL
- [ ] INDUSTRIAL
- [x] OTHER: transportation

LOCAL WATERSHED NPS POLLUTION
- [ ] NO EVIDENCE
- [x] SOME POTENTIAL SOURCES
- [ ] OBVIOUS SOURCES

LOCAL WATERSHED EROSION
- [ ] NONE
- [ ] MODERATE
- [ ] HEAVY

RIPARIAN VEG. (18 M. BUFFER)

INDICATE THE DOMINANT TYPE AND RECORD THE DOMINANT SPECIES PRESENT
- [x] TREES
- [ ] SHRUBS
- [ ] GRASSES
- [x] HERBACEOUS

DOMINANT SPECIES PRESENT? sugar maple, river birch, rubus, butterweed, jewelweed, grapevine, with witch hazel, rhododendron

INSTREAM FEATURES

STUDY LENGTH		FT.
STREAM WIDTH	20	FT.
STUDY REACH AREA	—	AC.
EST. DRAINAGE AREA	—	SQ. MI.
MACROINVERTEBRATES PRESENT?	[x] YES [ ] NO	
TAXA PRESENT	Caddis, stone	

CANOPY COVER
- [ ] OPEN
- [ ] PARTLY OPEN
- [ ] PARTLY SHADED
- [x] SHADED

PROPERTIES OF REACH, STREAM MORPHOLOGY TYPES
- [x] RIFFLE 30 %
- [x] RUN 60 %
- [x] POOL 10 %

CHANNELIZED [ ] YES [x] NO

DAM PRESENT [ ] YES [x] NO

LARGE WOODY DEBRIS

LWD	—	FT.^{2}
DENSITY OF LWD	—	FT.^{2}/MI.^{2}

AQUATIC VEGETATON

INDICATE THE DOMINANT TYPE AND RECORD THE DOMINANT SPECIES PRESENT
- [ ] ROOTED EMERGENT
- [ ] FLOATING ALGAE
- [ ] ROOTED SUBMERGENT
- [x] ATTACHED ALGAE
- [ ] ROOTED FLOATING
- [ ] FREE FLOATING

DOMINANT SPECIES PRESENT: GREEN ALGAE

PORTION OF THE REACH WITH AQUATIC VEGETATION: 10 %

WATER QUALITY

TEMPERATURE		°C
SPEC. CONDUCTANCE		
DISSOLVED OXYGEN		
pH		
TURBIDITY		
WQ INSTRUMENT USED		

WATER ODORS
- [x] NORMAL/NONE
- [ ] PETROLEUM
- [ ] FISHY
- [ ] SEWAGE
- [ ] CHEMICAL
- [ ] OTHER

WATER SURFACE OILS
- [ ] SLICK
- [ ] GLOBS
- [x] NONE
- [ ] SHEEN - Oily
- [ ] FLECKS
- [ ] OTHER

TURBIDITY (IF NOT MEASURED)
- [x] CLEAR
- [ ] TURBID
- [ ] STAINED
- [ ] SLIGHTLY TURBID
- [ ] OPAQUE
- [ ] OTHER

SEDIMENT/ SUBSTRATE

ODORS
- [x] NORMAL
- [ ] SEWAGE
- [ ] PETROLEUM
- [ ] OTHER
- [ ] ANAEROBIC
- [ ] NONE
- [ ] CHEMICAL

DEPOSITS
- [ ] SLUDGE
- [ ] PAPER FIBER
- [ ] RELICT SHELLS
- [ ] OTHER
- [ ] SAWDUST
- [ ] SAND

OILS
- [x] ABSENT
- [ ] MODERATE
- [ ] SLIGHT
- [ ] PROFUSE

UNDERSIDES OF NON-EMBEDDED STONES BLACK IN COLOR?
- [ ] YES
- [x] NO

INORGANIC SUBSTRATE COMPONENTS (ADD TO 100%)			ORGANIC SUBSTRATE COMPONENTS (MAY ADD TO LESS THAN 100%)		
SUBSTRATE TYPE	DIAMETER	% COMPOSITION IN SAMPLING REACH	SUBSTRATE TYPE	CHARACTERISTIC	% COMPOSITION IN SAMPLING REACH
BEDROCK	-	40	DETRITUS	STICKS, WOOD, COARSE PLANT MATERIALS (CPOM)	10 leaves, branches
BOULDER	256 MM (10"+)	25			
COBBLE	64 – 256 MM (2.5 – 10")	15	MUCK - MUD	BLACK, VERY FINE ORGANIC (FPOM)	—
GRAVEL	2 – 64 MM (0.1 – 2.5")	10			
SAND	0.06 -0 2 MM (GRITTY)	10			
SILT	0.004 – 0.06 MM	—	MARL	GREY, SHELL FRAGMENTS	—
CLAY	<0.004 MM (SLICK)	—			

S · SRC · 22

Riverine Assessment Form

Pennsylvania Riverine Condition Level 1 Rapid Assessment Version 1.0

For use in wadeable channels classified as intermittent or perennial

Project #	Project Name	Locality	HUC	Date	AA #	AA length
AIIJ	PTE ALLEGHENY TUNNEL			05.18.12	S·SRC·22	

Name(s) of Evaluator(s)	Steam Name and Information
SRC, ICLE, DLM	S·SRC·22 UNT TO STONEY CREEK RIVER

1. RIPARIAN VEGETATION: Assess the floodplain along the entire SAR (Visual estimates of areal covergae from aerial photos with field verified acceptable).

	Conditional Category							NOTES>>
	Optimal	Suboptimal		Marginal		Poor		
Riparian Vegetation (Floodplain)	Tree stratum (dbh > 3 inches) present, with > 60% tree canopy cover. Wetlands and stream channels located within the riparian areas.	**High Suboptimal:** Riparian areas with tree stratum (dbh > 3 inches) present, with 30% to 60% tree canopy cover and containing both herbaceous and shrub layers or a non-maintained understory.	**Low Suboptimal:** Riparian areas with tree stratum (dbh > 3 inches) present, with 30% to 60% tree canopy cover and a maintained understory Recent cutover (dense vegetation).	**High Marginal:** Non-maintained, dense herbaceous vegetation with either a shrub layer or a tree layer (dbh > 3 inches) present, with <30% tree canopy cover.	**Low Marginal:** Non-maintained, dense herbaceous vegetation, riparian areas lacking shrub and tree stratum, hay production, ponds, open water. If present, tree stratum (dbh >3 inches) present, with <30% tree canopy cover with maintained understory.	**High Poor:** Lawns, mowed, and maintained areas, nurseries; no-till cropland; actively grazed pasture, sparsely vegetated non-maintained area, recently seeded and stabilized, or other comparable condition.	**Low Poor:** Impervious surfaces, mine spoil lands, denuded surfaces, row crops, active feed lots, trails, or other comparable conditions.	
		High	Low	High	Low	High	Low	
Scores	20 19 18 17 16	15 14	13 12 11	10 9 8	7 6	5 4 3	2 1	

1. Identify Condition Category areas along the floodplain using the descriptors above.
2. Estimate the % area within each condition category. Calculators are provided for you below.
3. Enter the % Riparian Area and Score for each category in the blocks below.

Ensure the sums of % Riparian Blocks equal 100

Right Side	% Riparian Area>	1.00						100 0%		
	Score >	17						17		
									CI= Sum (Rt and Lt sub-Indexes)/2	
Left Side	% Riparian Area>	1.00						100 0%	Rt Sub-Index> 0.85 0.00	CI
	Score >	17						17	Lt Sub-Index> 0.85 0.00	0.00

0.85

2. RIPARIAN ZONE OF INFLUENCE: Assess land cover along both sides, 100 foot from edge of floodplain into the upland along the entire SAR (Visual estimates of areal covergae from aerial photos with field verified acceptable).

	Conditional Category							NOTES>>
	Optimal	Suboptimal		Marginal		Poor		
Riparian ZOI	Tree stratum (dbh > 3 inches) present, with > 60% tree canopy cover. Wetlands and stream channels located within the riparian areas.	**High Suboptimal:** Riparian areas with tree stratum (dbh > 3 inches) present, with 30% to 60% tree canopy cover and containing both herbaceous and shrub layers or a non-maintained understory.	**Low Suboptimal:** Riparian areas with tree stratum (dbh > 3 inches) present, with 30% to 60% tree canopy cover and a maintained understory. Recent cutover (dense vegetation).	**High Marginal:** Non-maintained, dense herbaceous vegetation with either a shrub layer or a tree layer (dbh > 3 inches) present, with <30% tree canopy cover.	**Low Marginal:** Non-maintained, dense herbaceous vegetation, riparian areas lacking shrub and tree stratum, hay production, ponds, open water. If present, tree stratum (dbh >3 inches) present, with <30% tree canopy cover with maintained understory.	**High Poor:** Lawns, mowed, and maintained areas, nurseries; no-till cropland; actively grazed pasture, sparsely vegetated non-maintained area, recently seeded and stabilized, or other comparable condition.	**Low Poor:** Impervious surfaces, mine spoil lands, denuded surfaces, row crops, active feed lots, trails, or other comparable conditions.	
		High	Low	High	Low	High	Low	
Score	20 19 18 17 16	15 14	13 12 11	10 9 8	7 6	5 4 3	2 1	

1. Identify Condition Category areas along each side of the Riparian ZOI using the descriptors above.
2. Estimate the % area within each condition category. Calculators are provided for you below.
3. Enter the % Riparian ZOI Area and Score for each condition category observed in the blocks below.

Ensure the sums of % Riparian ZOI Blocks equal 100

Right Side	% Riparian Area>	1.00						100 0%		
	Score >	17						17		
									CI= Sum (Rt and Lt sub-Indexes)/2	
Left Side	% Riparian Area>	1.00						100 0%	Rt Sub-Index> 0.85 0.00	CI
	Score >	17						17	Lt Sub-Index> 0.85 0.00	0.00

0.85

Comments:

ZOI IS MATURE, UPLAND DECIDUOUS FOREST.

RIPARIAN ECOTONE CONDITION INDEX		RECI
NOTE: The CIs and RECI should be rounded to 2 decimal places.	THE RIPARIAN ECOTONE CONDITION INDEX (RECI) RECI = (Sum of CI's)/2	0.00

0.85

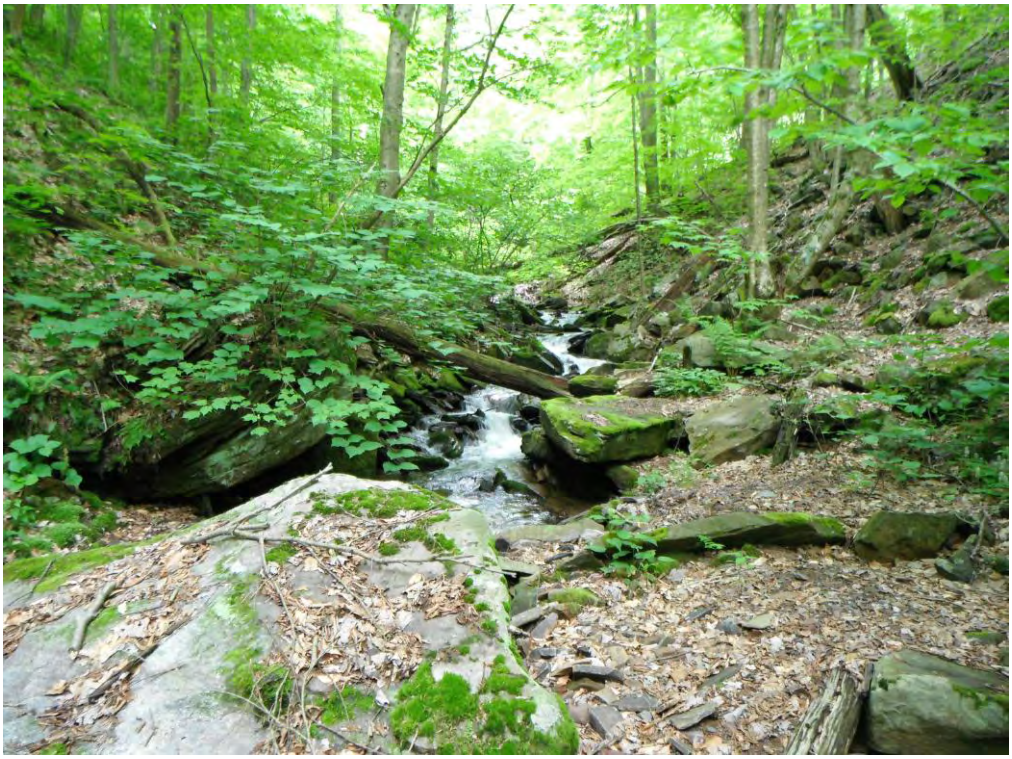

S-JHS-22 overview, facing upstream.

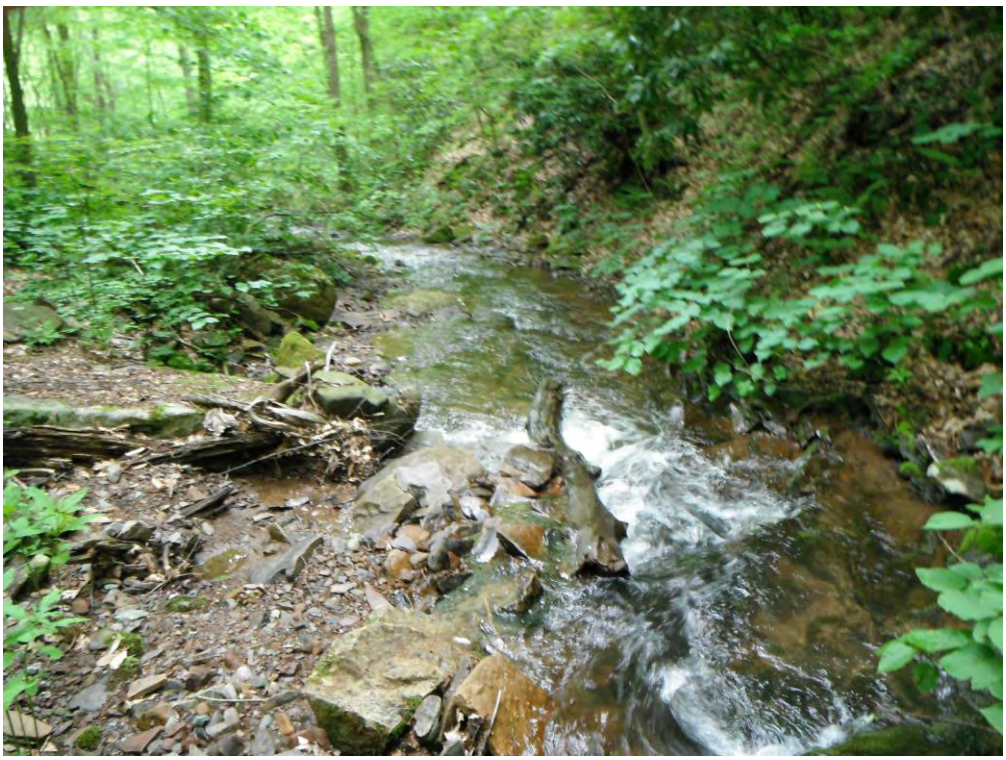

S-JHS-22 overview, facing downstream.

STREAM S-JHS-23

PHYSICAL CHARACTERIZATION/WATER QUALITY FIELD DATA SHEET

STREAM NAME	S-JHS-23			CLIENT	PTC
STREAM CLASS	EPHEMERAL			PROJECT	Allegheny Tunnel
INVESTIGATORS	LAU, DLM SRC	DATE	5/23/12 MM/DD/YR	LOCATION	Somerset County, PA
		TIME	11:50 24 HOUR (I.E. 16:45)		
LATITUDE		LONGITUDE		RIVER BASIN	RAYSTOWN BR. JUNIATA R.
STATION #		RIVERMILE		STORET #	

WEATHER CONDITIONS

NOW		PAST 24 HOURS
☐	STORM (HEAVY RAIN)	☐
☐	RAIN (STEADY RAIN)	☐
☐	SHOWERS (INTERMITTENT)	☐
☑ 90	% CLOUD COVER	90 ☑
☐	CLEAR/SUNNY	☐

HAS THERE BEEN A HEAVY RAIN IN THE LAST 7 DAYS? ☑ YES ☐ NO

AIR TEMPERATURE 70 °F

OTHER

SITE LOCATION MAP

PROVIDE A PLAN VIEW SKETCH WITH A NORTH ARROW (INDICATE DIRECTIONS OF PHOTOGRAPHS)

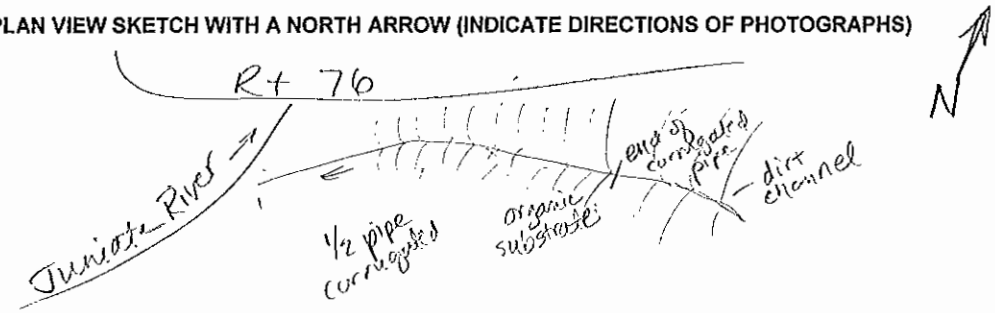

FOR LINEAR PROJECTS, PROVIDE DIMENSIONS AT THE CENTERLINE OF THE STREAM CROSSING.

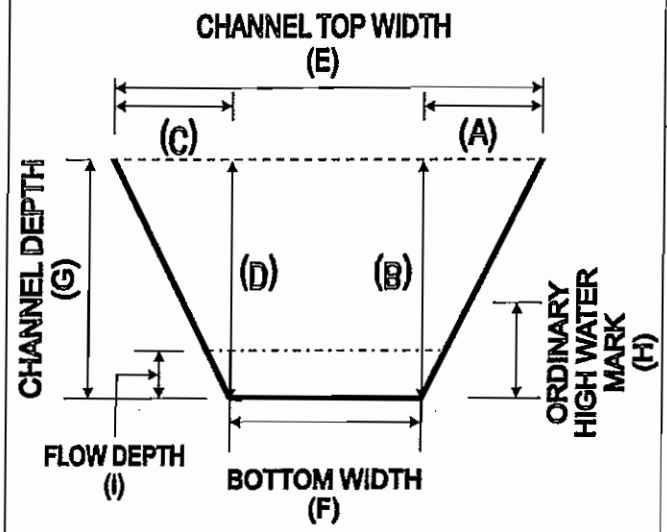

RIGHT BANK (FACE DOWNSTREAM)	HORIZONTAL (A)	1	FT.
	VERTICAL (B)	2.5	FT.
LEFT BANK (FACE DOWNSTREAM)	HORIZONTAL (C)	1	FT.
	VERTICAL (D)	2.5	FT.
CHANNEL DIMENSIONS	TOP WIDTH (E)	4	FT.
	BOTTOM WIDTH (F)	2	FT.
	OVERALL DEPTH (G)	2.5	FT.
	ORDINARY HIGH WATER MARK (H)	1	FT.
	FLOW DEPTH (I)	—	FT.
	APPROX. SURFACE VELOCITY	—	FT./SEC

STREAM CHARACTERIZATION

STREAM SUBSYSTEM
- ☐ PERENNIAL
- ☑ EPHEMERAL
- ☐ INTERMITTENT
- ☐ TIDAL

STREAM TYPE
- ☐ COLD WATER
- ☑ WARM WATER

CATCHMENT AREA 1 SQ. MI.

STREAM ORIGIN
- ☐ GLACIAL
- ☐ NON-GLACIAL MONTANE
- ☐ SWAMP AND BOG
- ☑ SPRING FED
- ☐ MIXTURE OF ORIGINS
- ☐ OTHER

STREAM ID: S-JHS-23

PHYSICAL CHARACTERIZATION/WATER QUALITY FIELD DATA SHEET

WATERSHED FEATURES

PREDOMINANT SURROUNDING LANDUSE
- [x] FOREST
- [ ] FIELD/PASTURE
- [ ] AGRICULTURAL
- [ ] RESIDENTIAL
- [ ] COMMERCIAL
- [ ] INDUSTRIAL
- [x] OTHER transportation

LOCAL WATERSHED NPS POLLUTION
- [ ] NO EVIDENCE
- [x] SOME POTENTIAL SOURCES
- [ ] OBVIOUS SOURCES

LOCAL WATERSHED EROSION
- [ ] NONE
- [ ] MODERATE
- [ ] HEAVY

RIPARIAN VEG. (18 M. BUFFER)

INDICATE THE DOMINANT TYPE AND RECORD THE DOMINANT SPECIES PRESENT
- [x] TREES
- [ ] SHRUBS
- [ ] GRASSES
- [x] HERBACEOUS

DOMINANT SPECIES PRESENT? Dogwood, fescue, goldenrod

INSTREAM FEATURES

STUDY LENGTH		FT.
STREAM WIDTH	2	FT.
STUDY REACH AREA	—	AC.
EST. DRAINAGE AREA		SQ. MI.
MACROINVERTEBRATES PRESENT?	[ ] YES [x] NO	
TAXA PRESENT	—	

CANOPY COVER
- [ ] OPEN
- [ ] PARTLY OPEN
- [x] PARTLY SHADED
- [ ] SHADED

PROPERTIES OF REACH, STREAM MORPHOLOGY TYPES
- [ ] RIFFLE %
- [ ] POOL %
- [ ] RUN %

CHANNELIZED [x] YES [ ] NO ½ pipe to top of slope

DAM PRESENT [ ] YES [ ] NO

LARGE WOODY DEBRIS

LWD	—	FT.^{2}
DENSITY OF LWD	—	FT.^{2}/MI.^{2}

AQUATIC VEGETATON

INDICATE THE DOMINANT TYPE AND RECORD THE DOMINANT SPECIES PRESENT
- [ ] ROOTED EMERGENT
- [ ] FLOATING ALGAE
- [ ] ROOTED SUBMERGENT
- [ ] ATTACHED ALGAE
- [ ] ROOTED FLOATING
- [ ] FREE FLOATING

DOMINANT SPECIES PRESENT

PORTION OF THE REACH WITH AQUATIC VEGETATION %

WATER QUALITY

TEMPERATURE		°C
SPEC. CONDUCTANCE		
DISSOLVED OXYGEN		
pH		
TURBIDITY		
WQ INSTRUMENT USED		

WATER ODORS
- [ ] NORMAL/NONE
- [ ] PETROLEUM
- [ ] FISHY
- [ ] SEWAGE
- [ ] CHEMICAL
- [ ] OTHER

WATER SURFACE OILS
- [ ] SLICK
- [ ] GLOBS
- [ ] NONE
- [ ] SHEEN - Oily
- [ ] FLECKS
- [ ] OTHER

TURBIDITY (IF NOT MEASURED)
- [ ] CLEAR
- [ ] TURBID
- [ ] STAINED
- [ ] SLIGHTLY TURBID
- [ ] OPAQUE
- [ ] OTHER

SEDIMENT/ SUBSTRATE

ODORS
- [x] NORMAL
- [ ] SEWAGE
- [ ] PETROLEUM
- [ ] OTHER
- [ ] ANAEROBIC
- [ ] NONE
- [ ] CHEMICAL

OILS
- [x] ABSENT
- [ ] MODERATE
- [ ] SLIGHT
- [ ] PROFUSE

DEPOSITS
- [ ] SLUDGE
- [ ] PAPER FIBER
- [ ] RELICT SHELLS
- [ ] OTHER
- [ ] SAWDUST
- [ ] SAND

UNDERSIDES OF NON-EMBEDDED STONES BLACK IN COLOR?
- [ ] YES
- [ ] NO

N/A

INORGANIC SUBSTRATE COMPONENTS (ADD TO 100%)			ORGANIC SUBSTRATE COMPONENTS (MAY ADD TO LESS THAN 100%)		
SUBSTRATE TYPE	DIAMETER	% COMPOSITION IN SAMPLING REACH	SUBSTRATE TYPE	CHARACTERISTIC	% COMPOSITION IN SAMPLING REACH
BEDROCK	-	—	DETRITUS	STICKS, WOOD, COARSE PLANT MATERIALS (CPOM)	60 leaves
BOULDER	256 MM (10"+)	—			
COBBLE	64 – 256 MM (2.5 – 10")	—	MUCK - MUD	BLACK, VERY FINE ORGANIC (FPOM)	—
GRAVEL	2 – 64 MM (0.1 – 2.5")	—			
SAND	0.06 -0 2 MM (GRITTY)	—			
SILT	0.004 – 0.06 MM	—	MARL	GREY, SHELL FRAGMENTS	—
CLAY	<0.004 MM (SLICK)	—			

S-JHS-23

Riverine Assessment Form

Pennsylvania Riverine Condition Level 1 Rapid Assessment Version 1.0

For use in wadeable channels classified as intermittent or perennial

Project #	Project Name	Locality	HUC	Date	AA #	AA length
A115	PTC ALLEGHENY TUNNEL			05.23.12	S-JHS-23	

Name(s) of Evaluator(s)	Steam Name and Information
SAC, DLM, LAH	S-JHS-23 UNT TO RAYSTOWN BRANCH OF JUNIATA RIVER

1. RIPARIAN VEGETATION: Assess the floodplain along the entire SAR (Visual estimates of areal covergae from aerial photos with field verified acceptable).

Conditional Category	Optimal	Suboptimal		Marginal		Poor		NOTES>>
Riparian Vegetation (Floodplain)	Tree stratum (dbh > 3 inches) present, with > 60% tree canopy cover. Wetlands and stream channels located within the riparian areas.	**High Suboptimal:** Riparian areas with tree stratum (dbh > 3 inches) present, with 30% to 60% tree canopy cover and containing both herbaceous and shrub layers or a non-maintained understory.	**Low Suboptimal:** Riparian areas with tree stratum (dbh > 3 inches) present, with 30% to 60% tree canopy cover and a maintained understory. Recent cutover (dense vegetation).	**High Marginal:** Non-maintained, dense herbaceous vegetation with either a shrub layer or a tree layer (dbh > 3 inches) present, with <30% tree canopy cover.	**Low Marginal:** Non-maintained, dense herbaceous vegetation, riparian areas lacking shrub and tree stratum, hay production, ponds, open water. If present, tree stratum (dbh >3 inches) present, with <30% tree canopy cover with maintained understory.	**High Poor:** Lawns, mowed, and maintained areas, nurseries; no-till cropland; actively grazed pasture, sparsely vegetated non-maintained area, recently seeded and stabilized, or other comparable condition.	**Low Poor:** Impervious surfaces, mine spoil lands, denuded surfaces, row crops, active feed lots, trails, or other comparable conditions.	
		High	Low	High	Low	High	Low	
Scores	20 19 18 17 16	15 14	13 12 11	10 9 8	7 6	5 4 3	2 1	

1. Identify Condition Category areas along the floodplain using the descriptors above.
2. Estimate the % area within each condition category. Calculators are provided for you below.
3. Enter the % Riparian Area and Score for each category in the blocks below.

Ensure the sums of % Riparian Blocks equal 100

Right Side	% Riparian Area>	0.70	0.30					100 %		
	Score >	5	3					4.4		
									CI= Sum (Rt and Lt sub-Indexes)/2	
Left Side	% Riparian Area>	0.80	0.20					100 %	Rt Sub-Index> 0.27 0.00	CI
	Score >	15	3					12.6	Lt Sub-Index> 0.63 0.00	0.00

0.43

2. RIPARIAN ZONE OF INFLUENCE: Assess land cover along both sides, 100 foot from edge of floodplain into the upland along the entire SAR (Visual estimates of areal covergae from aerial photos with field verified acceptable).

Conditional Category	Optimal	Suboptimal		Marginal		Poor		NOTES>>
Riparian ZOI	Tree stratum (dbh > 3 inches) present, with > 60% tree canopy cover. Wetlands and stream channels located within the riparian areas.	**High Suboptimal:** Riparian areas with tree stratum (dbh > 3 inches) present, with 30% to 60% tree canopy cover and containing both herbaceous and shrub layers or a non-maintained understory.	**Low Suboptimal:** Riparian areas with tree stratum (dbh > 3 inches) present, with 30% to 60% tree canopy cover and a maintained understory. Recent cutover (dense vegetation).	**High Marginal:** Non-maintained, dense herbaceous vegetation with either a shrub layer or a tree layer (dbh > 3 inches) present, with <30% tree canopy cover.	**Low Marginal:** Non-maintained, dense herbaceous vegetation, riparian areas lacking shrub and tree stratum, hay production, ponds, open water. If present, tree stratum (dbh >3 inches) present, with <30% tree canopy cover with maintained understory.	**High Poor:** Lawns, mowed, and maintained areas, nurseries; no-till cropland; actively grazed pasture, sparsely vegetated non-maintained area, recently seeded and stabilized, or other comparable condition.	**Low Poor:** Impervious surfaces, mine spoil lands, denuded surfaces, row crops, active feed lots, trails, or other comparable conditions.	
		High	Low	High	Low	High	Low	
Score	20 19 18 17 16	15 14	13 12 11	10 9 8	7 6	5 4 3	2 1	

1. Identify Condition Category areas along each side of the Riparian ZOI using the descriptors above.
2. Estimate the % area within each condition category. Calculators are provided for you below.
3. Enter the % Riparian ZOI Area and Score for each condition category observed in the blocks below.

Ensure the sums of % Riparian ZOI Blocks equal 100

Right Side	% Riparian Area>	0.60	0.30	0.10				100 %		
	Score >	3	5	1				3.4		
									CI= Sum (Rt and Lt sub-Indexes)/2	
Left Side	% Riparian Area>	0.80	0.20					100 %	Rt Sub-Index> 0.17 0.00	CI
	Score >	15	3					12.6	Lt Sub-Index> 0.63 0.00	0.00

0.42

Comments:

STORMWATER CHANNEL LOCATED @ TOP OF CUT FOR I-76 EASTBOUND.

RIPARIAN ECOTONE CONDITION INDEX		RECI
NOTE: The CIs and RECI should be rounded to 2 decimal places.	THE RIPARIAN ECOTONE CONDITION INDEX (RECI) RECI = (Sum of CI's)/2	0.00

0.42

S-JHS-23 overview, facing upstream.

S-JHS-23 overview, facing downstream.

STREAM S-JHS-24

PHYSICAL CHARACTERIZATION/WATER QUALITY FIELD DATA SHEET

STREAM NAME	S-JHS-24			CLIENT	PTC
STREAM CLASS	EPHEMERAL			PROJECT	Allegheny Tunnel
INVESTIGATORS	SAP DLM LAH	DATE	05.23.12 MM/DD/YR	LOCATION	Somerset County, PA
		TIME	12:15 24 HOUR (I.E. 16:45)		
LATITUDE		LONGITUDE		RIVER BASIN	RAYSTOWN BR. JUNIATA R.
STATION #		RIVERMILE		STORET #	

WEATHER CONDITIONS

NOW			PAST 24 HOURS
☐	STORM (HEAVY RAIN)		☐
☐	RAIN (STEADY RAIN)		☐
☐	SHOWERS (INTERMITTENT)		☐
☒ 100	% CLOUD COVER	100	☒
☐	CLEAR/SUNNY		☐

HAS THERE BEEN A HEAVY RAIN IN THE LAST 7 DAYS? ☒ YES ☐ NO

AIR TEMPERATURE 70 °F

OTHER

SITE LOCATION MAP

PROVIDE A PLAN VIEW SKETCH WITH A NORTH ARROW (INDICATE DIRECTIONS OF PHOTOGRAPHS)

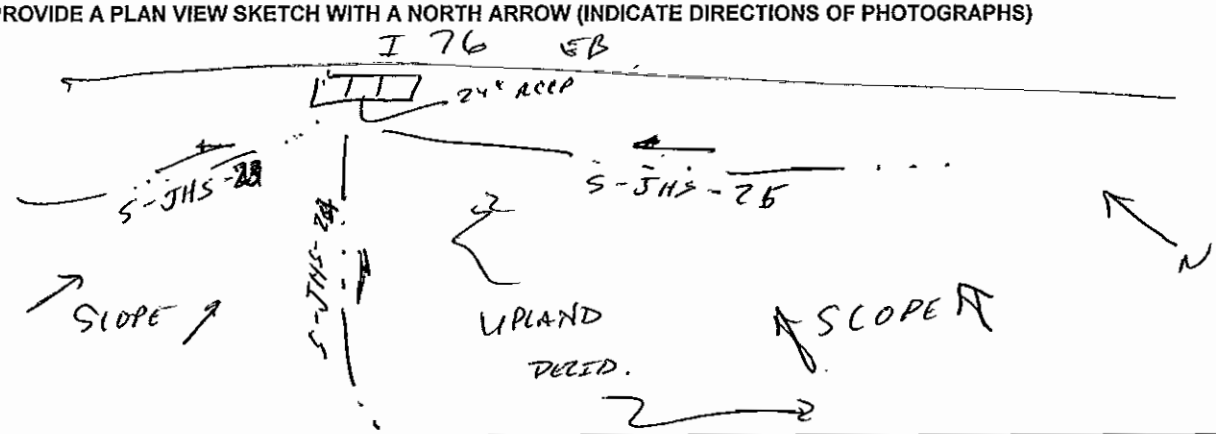

FOR LINEAR PROJECTS, PROVIDE DIMENSIONS AT THE CENTERLINE OF THE STREAM CROSSING.

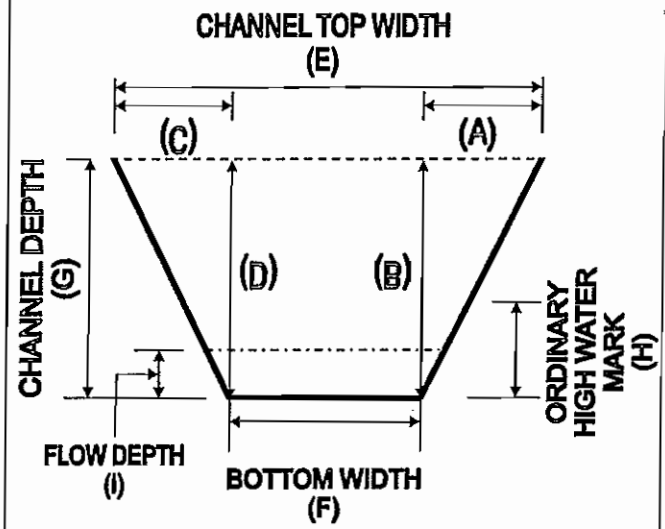

RIGHT BANK (FACE DOWNSTREAM)	HORIZONTAL (A)	0.5	FT.
	VERTICAL (B)	0.5	FT.
LEFT BANK (FACE DOWNSTREAM)	HORIZONTAL (C)	0.6	FT.
	VERTICAL (D)	0.6	FT.
CHANNEL DIMENSIONS	TOP WIDTH (E)	2.0	FT.
	BOTTOM WIDTH (F)	1.5	FT.
	OVERALL DEPTH (G)	0.6	FT.
	ORDINARY HIGH WATER MARK (H)	0.5	FT.
	FLOW DEPTH (I)	—	FT.
	APPROX. SURFACE VELOCITY	—	FT./SEC

STREAM CHARACTERIZATION

STREAM SUBSYSTEM
- ☐ PERENNIAL
- ☒ EPHEMERAL
- ☐ INTERMITTENT
- ☐ TIDAL

STREAM TYPE
- ☐ COLD WATER
- ☒ WARM WATER

CATCHMENT AREA ____ SQ. MI.

STREAM ORIGIN
- ☐ GLACIAL
- ☐ NON-GLACIAL MONTANE
- ☐ SWAMP AND BOG
- ☐ SPRING FED
- ☐ MIXTURE OF ORIGINS
- ☒ OTHER STORMWATER

STREAM ID: S-JHS-24

PHYSICAL CHARACTERIZATION/WATER QUALITY FIELD DATA SHEET

WATERSHED FEATURES

PREDOMINANT SURROUNDING LANDUSE: [X] FOREST [ ] FIELD/PASTURE [ ] AGRICULTURAL [ ] RESIDENTIAL [ ] COMMERCIAL [ ] INDUSTRIAL [ ] OTHER

LOCAL WATERSHED NPS POLLUTION: [X] NO EVIDENCE [ ] SOME POTENTIAL SOURCES [ ] OBVIOUS SOURCES

LOCAL WATERSHED EROSION: [X] NONE [ ] MODERATE [ ] HEAVY

RIPARIAN VEG. (18 M. BUFFER)

INDICATE THE DOMINANT TYPE AND RECORD THE DOMINANT SPECIES PRESENT: [X] TREES [ ] SHRUBS [ ] GRASSES [ ] HERBACEOUS

DOMINANT SPECIES PRESENT? WHITE OAK, BIRCH

INSTREAM FEATURES

STUDY LENGTH: 200 FT.

STREAM WIDTH: 7.0 FT.

STUDY REACH AREA: – AC.

EST. DRAINAGE AREA: – SQ. MI.

MACROINVERTEBRATES PRESENT?: [ ] YES [X] NO

TAXA PRESENT: –

CANOPY COVER: [ ] OPEN [ ] PARTLY OPEN [ ] PARTLY SHADED [X] SHADED

PROPERTIES OF REACH, STREAM MORPHOLOGY TYPES: [ ] RIFFLE % [ ] RUN %; [X] POOL %; CHANNELIZED [ ] YES [X] NO; DAM PRESENT [X] YES [ ] NO

LARGE WOODY DEBRIS

LWD: – FT.^{2}

DENSITY OF LWD: – FT.^{2}/MI.^{2}

AQUATIC VEGETATON

INDICATE THE DOMINANT TYPE AND RECORD THE DOMINANT SPECIES PRESENT: [ ] ROOTED EMERGENT [ ] ROOTED SUBMERGENT [ ] ROOTED FLOATING [ ] FLOATING ALGAE [ ] ATTACHED ALGAE [ ] FREE FLOATING

DOMINANT SPECIES PRESENT

PORTION OF THE REACH WITH AQUATIC VEGETATION %

WATER QUALITY

TEMPERATURE °C

SPEC. CONDUCTANCE

DISSOLVED OXYGEN

pH

TURBIDITY

WQ INSTRUMENT USED

WATER ODORS: [ ] NORMAL/NONE [ ] PETROLEUM [ ] FISHY [ ] SEWAGE [ ] CHEMICAL [ ] OTHER

WATER SURFACE OILS: [ ] SLICK [ ] GLOBS [ ] NONE [ ] SHEEN - Oily [ ] FLECKS [ ] OTHER

TURBIDITY (IF NOT MEASURED): [ ] CLEAR [ ] TURBID [ ] STAINED [ ] SLIGHTLY TURBID [ ] OPAQUE [ ] OTHER

SEDIMENT/ SUBSTRATE

ODORS: [X] NORMAL [ ] SEWAGE [ ] PETROLEUM [ ] OTHER [ ] ANAEROBIC [ ] NONE [ ] CHEMICAL

DEPOSITS: [ ] SLUDGE [ ] PAPER FIBER [ ] RELICT SHELLS [ ] OTHER [ ] SAWDUST [ ] SAND

OILS: [X] ABSENT [ ] MODERATE [ ] SLIGHT [ ] PROFUSE

UNDERSIDES OF NON-EMBEDDED STONES BLACK IN COLOR? [ ] YES [X] NO

INORGANIC SUBSTRATE COMPONENTS (ADD TO 100%)			ORGANIC SUBSTRATE COMPONENTS (MAY ADD TO LESS THAN 100%)		
SUBSTRATE TYPE	DIAMETER	% COMPOSITION IN SAMPLING REACH	SUBSTRATE TYPE	CHARACTERISTIC	% COMPOSITION IN SAMPLING REACH
BEDROCK	-	–	DETRITUS	STICKS, WOOD, COARSE PLANT MATERIALS (CPOM)	100
BOULDER	256 MM (10"+)	–			
COBBLE	64 – 256 MM (2.5 – 10")	20	MUCK - MUD	BLACK, VERY FINE ORGANIC (FPOM)	–
GRAVEL	2 – 64 MM (0.1 – 2.5")	20			
SAND	0.06 -0 2 MM (GRITTY)	–			
SILT	0.004 – 0.06 MM	40	MARL	GREY, SHELL FRAGMENTS	–
CLAY	<0.004 MM (SLICK)	20			

S·JHS·24

Riverine Assessment Form

Pennsylvania Riverine Condition Level 1 Rapid Assessment Version 1.0

For use in wadeable channels classified as intermittent or perennial

Project #	Project Name	Locality	HUC	Date	AA #	AA length
A11J	PTC ALLEGHENY TUNNEL			05.23.12	S-JHS-24	

Name(s) of Evaluator(s)	Steam Name and Information
SRC, DLM, LAH	S·JHS·24 UNT TO RAYSTOWN BRANCH OF JUNIATA RIVER

1. RIPARIAN VEGETATION: Assess the floodplain along the entire SAR (Visual estimates of areal covergae from aerial photos with field verified acceptable).

	Conditional Category							NOTES>>
	Optimal	Suboptimal		Marginal		Poor		
Riparian Vegetation (Floodplain)	Tree stratum (dbh > 3 inches) present, with > 60% tree canopy cover. Wetlands and stream channels located within the riparian areas	**High Suboptimal:** Riparian areas with tree stratum (dbh > 3 inches) present, with 30% to 60% tree canopy cover and containing both herbaceous and shrub layers or a non-maintained understory	**Low Suboptimal:** Riparian areas with tree stratum (dbh > 3 inches) present, with 30% to 60% tree canopy cover and a maintained understory. Recent cutover (dense vegetation).	**High Marginal:** Non-maintained, dense herbaceous vegetation with either a shrub layer or a tree layer (dbh > 3 inches) present, with <30% tree canopy cover.	**Low Marginal:** Non-maintained, dense herbaceous vegetation, riparian areas lacking shrub and tree stratum, hay production, ponds, open water. If present, tree stratum (dbh >3 inches) present, with <30% tree canopy cover with maintained understory.	**High Poor:** Lawns, mowed, and maintained areas, nurseries; no-till cropland; actively grazed pasture, sparsely vegetated non-maintained area, recently seeded and stabilized, or other comparable condition.	**Low Poor:** Impervious surfaces, mine spoil lands, denuded surfaces, row crops, active feed lots, trails, or other comparable conditions	
		High	Low	High	Low	High	Low	
Scores	20 19 18 17 16	15 14 13	12 11	10 9 8	7 6	5 4 3	2 1	

1. Identify Condition Category areas along the floodplain using the descriptors above.
2. Estimate the % area within each condition category. Calculators are provided for you below.
3. Enter the % Riparian Area and Score for each category in the blocks below.

Ensure the sums of % Riparian Blocks equal 100

Right Side	% Riparian Area>	1.00						100 %		
	Score >	14						14		
									CI= Sum (Rt and Lt sub-Indexes)/2	
Left Side	% Riparian Area>	1.00						100 %	Rt Sub-Index> 0.70 0.00	CI
	Score >	14						14	Lt Sub-Index> 0.70 0.00	0.00

0.70

2. RIPARIAN ZONE OF INFLUENCE: Assess land cover along both sides, 100 foot from edge of floodplain into the upland along the entire SAR (Visual estimates of areal covergae from aerial photos with field verified acceptable).

	Conditional Category							NOTES>>
	Optimal	Suboptimal		Marginal		Poor		
Riparian ZOI	Tree stratum (dbh > 3 inches) present, with > 60% tree canopy cover. Wetlands and stream channels located within the riparian areas.	**High Suboptimal:** Riparian areas with tree stratum (dbh > 3 inches) present, with 30% to 60% tree canopy cover and containing both herbaceous and shrub layers or a non-maintained understory	**Low Suboptimal:** Riparian areas with tree stratum (dbh > 3 inches) present, with 30% to 60% tree canopy cover and a maintained understory. Recent cutover (dense vegetation).	**High Marginal:** Non-maintained, dense herbaceous vegetation with either a shrub layer or a tree layer (dbh > 3 inches) present, with <30% tree canopy cover.	**Low Marginal:** Non-maintained, dense herbaceous vegetation, riparian areas lacking shrub and tree stratum, hay production, ponds, open water. If present, tree stratum (dbh >3 inches) present, with <30% tree canopy cover with maintained understory.	**High Poor:** Lawns, mowed, and maintained areas, nurseries; no-till cropland; actively grazed pasture, sparsely vegetated non-maintained area, recently seeded and stabilized, or other comparable condition.	**Low Poor:** Impervious surfaces, mine spoil lands, denuded surfaces, row crops, active feed lots, trails, or other comparable conditions.	
		High	Low	High	Low	High	Low	
Score	20 19 18 17 16	15 14 13	12 11	10 9 8	7 6	5 4 3	2 1	

1. Identify Condition Category areas along each side of the Riparian ZOI using the descriptors above.
2. Estimate the % area within each condition category. Calculators are provided for you below.
3. Enter the % Riparian ZOI Area and Score for each condition category observed in the blocks below.

Ensure the sums of % Riparian ZOI Blocks equal 100

Right Side	% Riparian Area>	0.90	0.10					100 %		
	Score >	14	3					12.9		
									CI= Sum (Rt and Lt sub-Indexes)/2	
Left Side	% Riparian Area>	0.90	0.10					100 %	Rt Sub-Index> 0.65 0.00	CI
	Score >	14	3					12.9	Lt Sub-Index> 0.65 0.00	0.00

0.65

Comments:

ZOI IS PREMARILY MATURE, UPLAND DECIDUOUS FOREST.

RIPARIAN ECOTONE CONDITION INDEX		RECI
NOTE: The CIs and RECI should be rounded to 2 decimal places.	THE RIPARIAN ECOTONE CONDITION INDEX (RECI) RECI = (Sum of CI's)/2	0.00

0.68

S-JHS-24 overview, facing upstream.

S-JHS-24 overview, facing downstream.

STREAM S-JHS-25

PHYSICAL CHARACTERIZATION/WATER QUALITY FIELD DATA SHEET

STREAM NAME	S-JHS-25			CLIENT	PTC
STREAM CLASS	EPHEMERAL			PROJECT	Allegheny Tunnel
INVESTIGATORS	SNC DLM LAH	DATE	05.23.12 MM/DD/YR	LOCATION	Somerset County, PA
		TIME	12:25 24 HOUR (I.E. 16:45)		
LATITUDE		LONGITUDE		RIVER BASIN	RAYSTOWN BR. JUNIATA R.
STATION #		RIVERMILE		STORET #	

WEATHER CONDITIONS

NOW		PAST 24 HOURS
[ ] 1	STORM (HEAVY RAIN)	[ ] 1
[ ] 2	RAIN (STEADY RAIN)	[ ] 2
[ ] 3	SHOWERS (INTERMITTENT)	[ ] 3
[X] 4	% CLOUD COVER 100	[X] 4 100
[ ] 5	CLEAR/SUNNY	[ ] 5

HAS THERE BEEN A HEAVY RAIN IN THE LAST 7 DAYS? [X] YES [ ] NO

AIR TEMPERATURE 70 °F

OTHER

SITE LOCATION MAP

PROVIDE A PLAN VIEW SKETCH WITH A NORTH ARROW (INDICATE DIRECTIONS OF PHOTOGRAPHS)

REFER TO S-JHS-24 FIELD SKETCH

FOR LINEAR PROJECTS, PROVIDE DIMENSIONS AT THE CENTERLINE OF THE STREAM CROSSING.

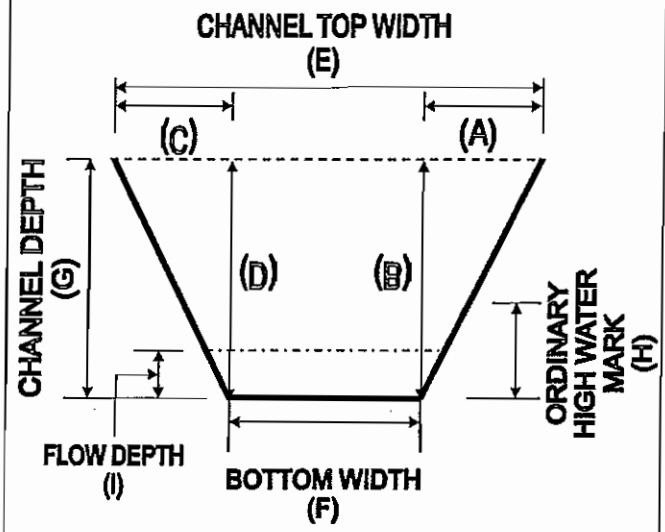

RIGHT BANK (FACE DOWNSTREAM)	HORIZONTAL (A)	0.5	FT.
	VERTICAL (B)	0.5	FT.
LEFT BANK (FACE DOWNSTREAM)	HORIZONTAL (C)	0.5	FT.
	VERTICAL (D)	0.5	FT.
CHANNEL DIMENSIONS	TOP WIDTH (E)	2.5	FT.
	BOTTOM WIDTH (F)	1.5	FT.
	OVERALL DEPTH (G)	1.0	FT.
	ORDINARY HIGH WATER MARK (H)	0.5	FT.
	FLOW DEPTH (I)	—	FT.
	APPROX. SURFACE VELOCITY	—	FT./SEC

STREAM CHARACTERIZATION

STREAM SUBSYSTEM
- [ ] PERENNIAL
- [X] EPHEMERAL
- [ ] INTERMITTENT
- [ ] TIDAL

STREAM TYPE
- [ ] COLD WATER
- [X] WARM WATER

CATCHMENT AREA ____ SQ. MI.

STREAM ORIGIN
- [ ] GLACIAL
- [ ] NON-GLACIAL MONTANE
- [ ] SWAMP AND BOG
- [ ] SPRING FED
- [ ] MIXTURE OF ORIGINS
- [X] OTHER STORMWATER

STREAM ID: S-JHS-25

PHYSICAL CHARACTERIZATION/WATER QUALITY FIELD DATA SHEET

WATERSHED FEATURES

PREDOMINANT SURROUNDING LANDUSE
- [ ] FOREST
- [ ] FIELD/PASTURE
- [ ] AGRICULTURAL
- [ ] RESIDENTIAL
- [ ] COMMERCIAL
- [ ] INDUSTRIAL
- [ ] OTHER TRANSPORTATION

LOCAL WATERSHED NPS POLLUTION
- [ ] NO EVIDENCE
- [ ] SOME POTENTIAL SOURCES
- [ ] OBVIOUS SOURCES

LOCAL WATERSHED EROSION
- [ ] NONE
- [ ] MODERATE
- [ ] HEAVY

RIPARIAN VEG. (18 M. BUFFER)

INDICATE THE DOMINANT TYPE AND RECORD THE DOMINANT SPECIES PRESENT
- [ ] TREES
- [ ] SHRUBS
- [ ] GRASSES
- [ ] HERBACEOUS

DOMINANT SPECIES PRESENT? BIRCH, WITCH HAZEL

INSTREAM FEATURES

STUDY LENGTH	~200	FT.
STREAM WIDTH	25	FT.
STUDY REACH AREA	–	AC.
EST. DRAINAGE AREA	–	SQ. MI.
MACROINVERTEBRATES PRESENT?	[ ] YES [ ] NO	
TAXA PRESENT	–	

CANOPY COVER
- [ ] OPEN
- [ ] PARTLY OPEN
- [ ] PARTLY SHADED
- [ ] SHADED

PROPERTIES OF REACH, STREAM MORPHOLOGY TYPES
- [ ] RIFFLE – %
- [ ] RUN – %
- [ ] POOL – %
- CHANNELIZED [ ] YES [ ] NO
- DAM PRESENT [ ] YES [ ] NO

LARGE WOODY DEBRIS

LWD	–	FT.^{2}
DENSITY OF LWD	–	FT.^{2}/MI.^{2}

AQUATIC VEGETATON

INDICATE THE DOMINANT TYPE AND RECORD THE DOMINANT SPECIES PRESENT
- [ ] ROOTED EMERGENT
- [ ] FLOATING ALGAE
- [ ] ROOTED SUBMERGENT
- [ ] ATTACHED ALGAE
- [ ] ROOTED FLOATING
- [ ] FREE FLOATING

DOMINANT SPECIES PRESENT
PORTION OF THE REACH WITH AQUATIC VEGETATION %

WATER QUALITY

TEMPERATURE		°C
SPEC. CONDUCTANCE		
DISSOLVED OXYGEN		
pH		
TURBIDITY		
WQ INSTRUMENT USED		

WATER ODORS
- [ ] NORMAL/NONE
- [ ] PETROLEUM
- [ ] FISHY
- [ ] SEWAGE
- [ ] CHEMICAL
- [ ] OTHER

WATER SURFACE OILS
- [ ] SLICK
- [ ] GLOBS
- [ ] NONE
- [ ] SHEEN - Oily
- [ ] FLECKS
- [ ] OTHER

TURBIDITY (IF NOT MEASURED)
- [ ] CLEAR
- [ ] TURBID
- [ ] STAINED
- [ ] SLIGHTLY TURBID
- [ ] OPAQUE
- [ ] OTHER

SEDIMENT/ SUBSTRATE

ODORS
- [ ] NORMAL
- [ ] SEWAGE
- [ ] PETROLEUM
- [ ] OTHER
- [ ] ANAEROBIC
- [ ] NONE
- [ ] CHEMICAL

DEPOSITS
- [ ] SLUDGE
- [ ] PAPER FIBER
- [ ] RELICT SHELLS
- [ ] OTHER
- [ ] SAWDUST
- [ ] SAND

OILS
- [ ] ABSENT
- [ ] MODERATE
- [ ] SLIGHT
- [ ] PROFUSE

UNDERSIDES OF NON-EMBEDDED STONES BLACK IN COLOR?
- [ ] YES
- [ ] NO

INORGANIC SUBSTRATE COMPONENTS (ADD TO 100%)			ORGANIC SUBSTRATE COMPONENTS (MAY ADD TO LESS THAN 100%)		
SUBSTRATE TYPE	DIAMETER	% COMPOSITION IN SAMPLING REACH	SUBSTRATE TYPE	CHARACTERISTIC	% COMPOSITION IN SAMPLING REACH
BEDROCK	-	–	DETRITUS	STICKS, WOOD, COARSE PLANT MATERIALS (CPOM)	100
BOULDER	256 MM (10"+)	–			
COBBLE	64 – 256 MM (2.5 – 10")	20	MUCK - MUD	BLACK, VERY FINE ORGANIC (FPOM)	–
GRAVEL	2 – 64 MM (0.1 – 2.5")	10			
SAND	0.06 -0 2 MM (GRITTY)	–			
SILT	0.004 – 0.06 MM	40	MARL	GREY, SHELL FRAGMENTS	–
CLAY	<0.004 MM (SLICK)	30			

S · JHS · 25

Riverine Assessment Form

Pennsylvania Riverine Condition Level 1 Rapid Assessment Version 1.0

For use in wadeable channels classified as intermittent or perennial

Project #	Project Name	Locality	HUC	Date	AA #	AA length
AIJ	PTC ALLEGHENY TUNNEL			05.23.12	S-JHS-25	

Name(s) of Evaluator(s)	Steam Name and Information
SRC, DLM, LAH	S-JHS-25 UNT TO RAYSTOWN BRANCH OF JUNIATA RIVER

1. RIPARIAN VEGETATION: Assess the floodplain along the entire SAR (Visual estimates of areal covergae from aerial photos with field verified acceptable).

Conditional Category	Optimal	Suboptimal		Marginal		Poor		NOTES>>
Riparian Vegetation (Floodplain)	Tree stratum (dbh > 3 inches) present, with > 60% tree canopy cover. Wetlands and stream channels located within the riparian areas	**High Suboptimal:** Riparian areas with tree stratum (dbh > 3 inches) present, with 30% to 60% tree canopy cover and containing both herbaceous and shrub layers or a non-maintained understory	**Low Suboptimal:** Riparian areas with tree stratum (dbh > 3 inches) present, with 30% to 60% tree canopy cover and a maintained understory. Recent cutover (dense vegetation).	**High Marginal:** Non-maintained, dense herbaceous vegetation with either a shrub layer or a tree layer (dbh > 3 inches) present, with <30% tree canopy cover.	**Low Marginal:** Non-maintained, dense herbaceous vegetation, riparian areas lacking shrub and tree stratum, hay production, ponds, open water. If present, tree stratum (dbh >3 inches) present, with <30% tree canopy cover with maintained understory.	**High Poor:** Lawns, mowed, and maintained areas, nurseries, no-till cropland; actively grazed pasture, sparsely vegetated non-maintained area, recently seeded and stabilized, or other comparable condition.	**Low Poor:** Impervious surfaces, mine spoil lands, denuded surfaces, row crops, active feed lots, trails, or other comparable conditions.	
		High	Low	High	Low	High	Low	
Scores	20 19 18 17 16	15 14 13	12 11	10 9 8	7 6	5 4 3	2 1	

1. Identify Condition Category areas along the floodplain using the descriptors above.
2. Estimate the % area within each condition category. Calculators are provided for you below.
3. Enter the % Riparian Area and Score for each category in the blocks below.

Ensure the sums of % Riparian Blocks equal 100

Right Side	% Riparian Area>	1.00						100.0%		
	Score >	3						3		
									CI= Sum (Rt and Lt sub-Indexes)/2	
Left Side	% Riparian Area>	1.00						100.0%	Rt Sub-Index> 0.00	CI
	Score >	14						14	Lt Sub-Index> 0.70	0.00

0.45

2. RIPARIAN ZONE OF INFLUENCE: Assess land cover along both sides, 100 foot from edge of floodplain into the upland along the entire SAR (Visual estimates of areal covergae from aerial photos with field verified acceptable).

Conditional Category	Optimal	Suboptimal		Marginal		Poor		NOTES>>
Riparian ZOI	Tree stratum (dbh > 3 inches) present, with > 60% tree canopy cover. Wetlands and stream channels located within the riparian areas.	**High Suboptimal:** Riparian areas with tree stratum (dbh > 3 inches) present, with 30% to 60% tree canopy cover and containing both herbaceous and shrub layers or a non-maintained understory	**Low Suboptimal:** Riparian areas with tree stratum (dbh > 3 inches) present, with 30% to 60% tree canopy cover and a maintained understory. Recent cutover (dense vegetation).	**High Marginal:** Non-maintained, dense herbaceous vegetation with either a shrub layer or a tree layer (dbh > 3 inches) present, with <30% tree canopy cover.	**Low Marginal:** Non-maintained, dense herbaceous vegetation, riparian areas lacking shrub and tree stratum, hay production, ponds, open water. If present, tree stratum (dbh >3 inches) present, with <30% tree canopy cover with maintained understory.	**High Poor:** Lawns, mowed, and maintained areas, nurseries; no-till cropland, actively grazed pasture, sparsely vegetated non-maintained area, recently seeded and stabilized, or other comparable condition.	**Low Poor:** Impervious surfaces, mine spoil lands, denuded surfaces, row crops, active feed lots, trails, or other comparable conditions.	
		High	Low	High	Low	High	Low	
Score	20 19 18 17 16	15 14 13	12 11	10 9 8	7 6	5 4 3	2 1	

1. Identify Condition Category areas along each side of the Riparian ZOI using the descriptors above.
2. Estimate the % area within each condition category. Calculators are provided for you below.
3. Enter the % Riparian ZOI Area and Score for each condition category observed in the blocks below.

Ensure the sums of % Riparian ZOI Blocks equal 100

Right Side	% Riparian Area>	0.70	0.30					100.0%		
	Score >	1	3					1.6		
									CI= Sum (Rt and Lt sub-Indexes)/2	
Left Side	% Riparian Area>	1.00						100.0%	Rt Sub-Index> 0.00	CI
	Score >	14						14	Lt Sub-Index> 0.70	0.00

0.39

Comments:

ROADSIDE STORMWATER CHANNEL @ TOP OF CUT SLOPE FOR I-76 EASTBOUND.

RIPARIAN ECOTONE CONDITION INDEX		RECI
NOTE: **The CIs and RECI should be rounded to 2 decimal places.**	**THE RIPARIAN ECOTONE CONDITION INDEX (RECI) RECI = (Sum of CI's)/2**	0.00

0.41

S-JHS-25 overview, facing upstream.

S-JHS-25 overview, facing downstream.

STREAM S-JHS-26

PHYSICAL CHARACTERIZATION/WATER QUALITY FIELD DATA SHEET

STREAM NAME	S. JTS. 26			CLIENT	PTC
STREAM CLASS	PERENNIAL			PROJECT	Allegheny Tunnel
INVESTIGATORS	SAC DLM LAM	DATE	05.23.12 MM/DD/YR	LOCATION	Somerset County, PA
		TIME	1410 24 HOUR (I.E. 16:45)		
LATITUDE		LONGITUDE		RIVER BASIN	RAYSTOWN BR. JUNIATA R.
STATION #		RIVERMILE		STORET #	

WEATHER CONDITIONS	NOW			PAST 24 HOURS
	[ ]	STORM (HEAVY RAIN)		[ ]
	[ ]	RAIN (STEADY RAIN)		[ ]
	[ ]	SHOWERS (INTERMITTENT)		[ ]
	[X]	100 % CLOUD COVER	100	[ ]
	[ ]	CLEAR/SUNNY		[ ]

HAS THERE BEEN A HEAVY RAIN IN THE LAST 7 DAYS? [X] YES [ ] NO

AIR TEMPERATURE 75 °F

OTHER

SITE LOCATION MAP

PROVIDE A PLAN VIEW SKETCH WITH A NORTH ARROW (INDICATE DIRECTIONS OF PHOTOGRAPHS)

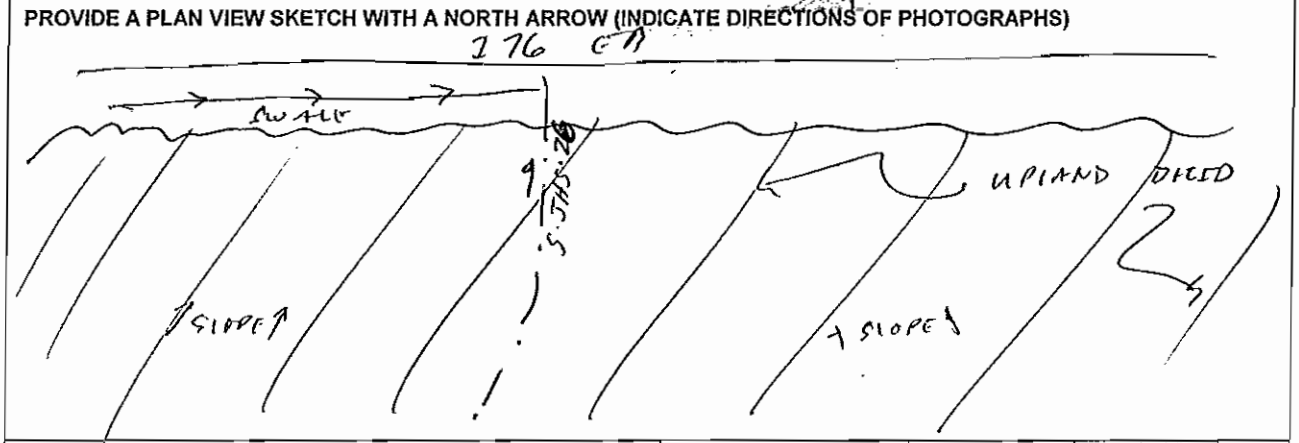

FOR LINEAR PROJECTS, PROVIDE DIMENSIONS AT THE CENTERLINE OF THE STREAM CROSSING.

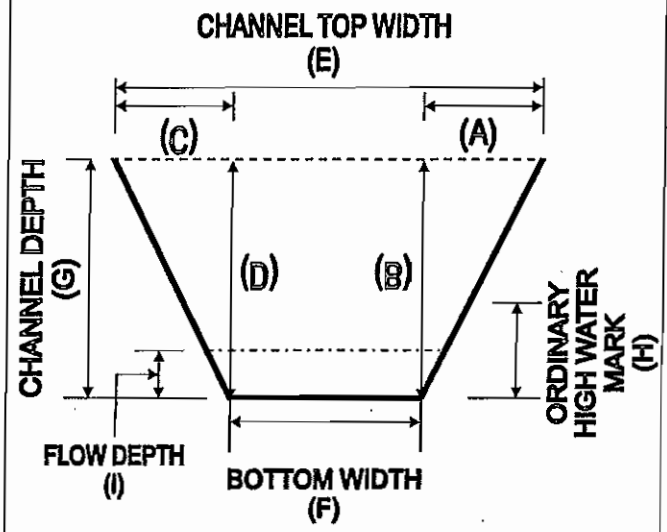

RIGHT BANK (FACE DOWNSTREAM)	HORIZONTAL (A)	0.5	FT.
	VERTICAL (B)	0.5	FT.
LEFT BANK (FACE DOWNSTREAM)	HORIZONTAL (C)	0.5	FT.
	VERTICAL (D)	0.5	FT.
CHANNEL DIMENSIONS	TOP WIDTH (E)	3.0	FT.
	BOTTOM WIDTH (F)	1.5	FT.
	OVERALL DEPTH (G)	0.75	FT.
	ORDINARY HIGH WATER MARK (H)	0.45	FT.
	FLOW DEPTH (I)	0.15	FT.
	APPROX. SURFACE VELOCITY	<5	FT./SEC

STREAM CHARACTERIZATION

STREAM SUBSYSTEM
[X] PERENNIAL [ ] INTERMITTENT
[ ] EPHEMERAL [ ] TIDAL

STREAM TYPE
[ ] COLD WATER [X] WARM WATER
CATCHMENT AREA SQ. MI.

STREAM ORIGIN
[ ] GLACIAL [X] SPRING FED
[ ] NON-GLACIAL MONTANE [ ] MIXTURE OF ORIGINS
[ ] SWAMP AND BOG [ ] OTHER

STREAM ID: S-JHS-26

PHYSICAL CHARACTERIZATION/WATER QUALITY FIELD DATA SHEET

WATERSHED FEATURES

PREDOMINANT SURROUNDING LANDUSE: [X] FOREST [ ] FIELD/PASTURE [ ] AGRICULTURAL [ ] RESIDENTIAL [ ] COMMERCIAL [ ] INDUSTRIAL [ ] OTHER

LOCAL WATERSHED NPS POLLUTION: [X] NO EVIDENCE [ ] SOME POTENTIAL SOURCES [ ] OBVIOUS SOURCES

LOCAL WATERSHED EROSION: [X] NONE [ ] MODERATE [ ] HEAVY

RIPARIAN VEG. (18 M. BUFFER)

INDICATE THE DOMINANT TYPE AND RECORD THE DOMINANT SPECIES PRESENT: [X] TREES [ ] SHRUBS [ ] GRASSES [ ] HERBACEOUS

DOMINANT SPECIES PRESENT? BLACK CHERRY & SUGAR MAPLE

INSTREAM FEATURES

STUDY LENGTH: ~300 FT.

STREAM WIDTH: 3.0 FT.

STUDY REACH AREA: – AC.

EST. DRAINAGE AREA: – SQ. MI.

MACROINVERTEBRATES PRESENT?: [X] YES [ ] NO

TAXA PRESENT: MIDGES & MAYFLY

CANOPY COVER: [ ] OPEN [ ] PARTLY OPEN [ ] PARTLY SHADED [X] SHADED

PROPERTIES OF REACH, STREAM MORPHOLOGY TYPES: [X] RIFFLE ND % [ ] RUN % [ ] POOL %

CHANNELIZED: [ ] YES [ ] NO

DAM PRESENT: [ ] YES [ ] NO

LARGE WOODY DEBRIS

LWD: – FT.^{2}

DENSITY OF LWD: – FT.^{2}/MI.^{2}

AQUATIC VEGETATON

INDICATE THE DOMINANT TYPE AND RECORD THE DOMINANT SPECIES PRESENT: [ ] ROOTED EMERGENT [ ] ROOTED SUBMERGENT [ ] ROOTED FLOATING [ ] FLOATING ALGAE [ ] ATTACHED ALGAE [ ] FREE FLOATING

DOMINANT SPECIES PRESENT

PORTION OF THE REACH WITH AQUATIC VEGETATION %

WATER QUALITY

TEMPERATURE °C

SPEC. CONDUCTANCE

DISSOLVED OXYGEN

pH

TURBIDITY

WQ INSTRUMENT USED

WATER ODORS: [X] NORMAL/NONE [ ] PETROLEUM [ ] FISHY [ ] SEWAGE [ ] CHEMICAL [ ] OTHER

WATER SURFACE OILS: [ ] SLICK [ ] GLOBS [X] NONE [ ] SHEEN - Oily [ ] FLECKS [ ] OTHER

TURBIDITY (IF NOT MEASURED): [X] CLEAR [ ] TURBID [ ] STAINED [ ] SLIGHTLY TURBID [ ] OPAQUE [ ] OTHER

SEDIMENT/ SUBSTRATE

ODORS: [X] NORMAL [ ] SEWAGE [ ] PETROLEUM [ ] OTHER [ ] ANAEROBIC [ ] NONE [ ] CHEMICAL

DEPOSITS: [ ] SLUDGE [ ] PAPER FIBER [ ] RELICT SHELLS [ ] OTHER [ ] SAWDUST [ ] SAND

OILS: [X] ABSENT [ ] MODERATE [ ] SLIGHT [ ] PROFUSE

UNDERSIDES OF NON-EMBEDDED STONES BLACK IN COLOR? [ ] YES [X] NO

INORGANIC SUBSTRATE COMPONENTS (ADD TO 100%)			ORGANIC SUBSTRATE COMPONENTS (MAY ADD TO LESS THAN 100%)		
SUBSTRATE TYPE	DIAMETER	% COMPOSITION IN SAMPLING REACH	SUBSTRATE TYPE	CHARACTERISTIC	% COMPOSITION IN SAMPLING REACH
BEDROCK	-	–	DETRITUS	STICKS, WOOD, COARSE PLANT MATERIALS (CPOM)	60
BOULDER	256 MM (10"+)	–			
COBBLE	64 – 256 MM (2.5 – 10")	25	MUCK - MUD	BLACK, VERY FINE ORGANIC (FPOM)	–
GRAVEL	2 – 64 MM (0.1 – 2.5")	25			
SAND	0.06 -0 2 MM (GRITTY)	–			
SILT	0.004 – 0.06 MM	40	MARL	GREY, SHELL FRAGMENTS	–
CLAY	<0.004 MM (SLICK)	10			

S-JHS-26

Riverine Assessment Form

Pennsylvania Riverine Condition Level 1 Rapid Assessment Version 1.0

For use in wadeable channels classified as intermittent or perennial

Project #	Project Name	Locality	HUC	Date	AA #	AA length
AIJ	PTC ALLEGHENY TUNNEL			05.23.12	S-JHS-26	

Name(s) of Evaluator(s)	Steam Name and Information
SRC, DLM, LAU	S-JHS-26 UNT TO RAYSTOWN BRANCH OF JUNIATA RIVER

1. RIPARIAN VEGETATION: Assess the floodplain along the entire SAR (Visual estimates of areal covergae from aerial photos with field verified acceptable).

	Conditional Category							NOTES>>
	Optimal	Suboptimal		Marginal		Poor		
Riparian Vegetation (Floodplain)	Tree stratum (dbh > 3 inches) present, with > 60% tree canopy cover. Wetlands and stream channels located within the riparian areas.	**High Suboptimal:** Riparian areas with tree stratum (dbh > 3 inches) present, with 30% to 60% tree canopy cover and containing both herbaceous and shrub layers or a non-maintained understory.	**Low Suboptimal:** Riparian areas with tree stratum (dbh > 3 inches) present, with 30% to 60% tree canopy cover and a maintained understory. Recent cutover (dense vegetation).	**High Marginal:** Non-maintained, dense herbaceous vegetation with either a shrub layer or a tree layer (dbh > 3 inches) present, with <30% tree canopy cover.	**Low Marginal:** Non-maintained, dense herbaceous vegetation, riparian areas lacking shrub and tree stratum, hay production, ponds, open water. If present, tree stratum (dbh >3 inches) present, with <30% tree canopy cover with maintained understory.	**High Poor:** Lawns, mowed, and maintained areas, nurseries; no-till cropland; actively grazed pasture, sparsely vegetated non-maintained area, recently seeded and stabilized, or other comparable condition.	**Low Poor:** Impervious surfaces, mine spoil lands, denuded surfaces, row crops, active feed lots, trails, or other comparable conditions.	
		High	Low	High	Low	High	Low	
Scores	20 19 18 17 16	15 14 13	12 11	10 9 8	7 6	5 4 3	2 1	

1. Identify Condition Category areas along the floodplain using the descriptors above.
2. Estimate the % area within each condition category. Calculators are provided for you below.
3. Enter the % Riparian Area and Score for each category in the blocks below.

Ensure the sums of % Riparian Blocks equal 100

Right Side	% Riparian Area>	0.80	0.20					100 %		
	Score >	14	3					11.8		
									CI= Sum (Rt and Lt sub-indexes)/2	
Left Side	% Riparian Area>	0.80	0.20					100 %	Rt Sub-Index> 0.59 0.00	CI
	Score >	14	3					11.8	Lt Sub-Index> 0.59 0.00	0.00

0.59

2. RIPARIAN ZONE OF INFLUENCE: Assess land cover along both sides, 100 foot from edge of floodplain into the upland along the entire SAR (Visual estimates of areal covergae from aerial photos with field verified acceptable).

	Conditional Category							NOTES>>
	Optimal	Suboptimal		Marginal		Poor		
Riparian ZOI	Tree stratum (dbh > 3 inches) present, with > 60% tree canopy cover. Wetlands and stream channels located within the riparian areas.	**High Suboptimal:** Riparian areas with tree stratum (dbh > 3 inches) present, with 30% to 60% tree canopy cover and containing both herbaceous and shrub layers or a non-maintained understory.	**Low Suboptimal:** Riparian areas with tree stratum (dbh > 3 inches) present, with 30% to 60% tree canopy cover and a maintained understory. Recent cutover (dense vegetation).	**High Marginal:** Non-maintained, dense herbaceous vegetation with either a shrub layer or a tree layer (dbh > 3 inches) present, with <30% tree canopy cover.	**Low Marginal:** Non-maintained, dense herbaceous vegetation, riparian areas lacking shrub and tree stratum, hay production, ponds, open water. If present, tree stratum (dbh >3 inches) present, with <30% tree canopy cover with maintained understory.	**High Poor:** Lawns, mowed, and maintained areas, nurseries; no-till cropland; actively grazed pasture, sparsely vegetated non-maintained area, recently seeded and stabilized, or other comparable condition.	**Low Poor:** Impervious surfaces, mine spoil lands, denuded surfaces, row crops, active feed lots, trails, or other comparable conditions.	
		High	Low	High	Low	High	Low	
Score	20 19 18 17 16	15 14 13	12 11	10 9 8	7 6	5 4 3	2 1	

1. Identify Condition Category areas along each side of the Riparian ZOI using the descriptors above.
2. Estimate the % area within each condition category. Calculators are provided for you below.
3. Enter the % Riparian ZOI Area and Score for each condition category observed in the blocks below.

Ensure the sums of % Riparian ZOI Blocks equal 100

Right Side	% Riparian Area>	0.80	0.20					100 %		
	Score >	14	3					11.8		
									CI= Sum (Rt and Lt sub-indexes)/2	
Left Side	% Riparian Area>	0.80	0.20					100 %	Rt Sub-Index> 0.59 0.00	CI
	Score >	14	3					11.8	Lt Sub-Index> 0.59 0.00	0.00

0.59

Comments:

PRIMARY ZOI IS MATURE, UPLAND DECIDUOUS FOREST.

RIPARIAN ECOTONE CONDITION INDEX		RECI
NOTE: The CIs and RECI should be rounded to 2 decimal places.	THE RIPARIAN ECOTONE CONDITION INDEX (RECI) RECI = (Sum of CI's)/2	0.00

0.59

S-JHS-26 overview, facing upstream.

S-JHS-26 overview, facing downstream.

STREAM S-JHS-27

PHYSICAL CHARACTERIZATION/WATER QUALITY FIELD DATA SHEET

STREAM NAME	S-SHS-27			CLIENT	PTC
STREAM CLASS	INTERMITTENT			PROJECT	Allegheny Tunnel
INVESTIGATORS	JRC, DLM, LAM	DATE	05.23.12 MM/DD/YR	LOCATION	Somerset County, PA
		TIME	14:21 24 HOUR (I.E. 16:45)		
LATITUDE		LONGITUDE		RIVER BASIN	RAYSTOWN BR. JUNIATA R.
STATION #	-	RIVERMILE	-	STORET #	-

WEATHER CONDITIONS

NOW			PAST 24 HOURS
[ ] 1	STORM (HEAVY RAIN)		[ ] 1
[ ] 2	RAIN (STEADY RAIN)		[ ] 2
[ ] 3	SHOWERS (INTERMITTENT)		[ ] 3
[X] 4	% CLOUD COVER	100	[X] 4
[ ] 5	CLEAR/SUNNY		[ ] 5

HAS THERE BEEN A HEAVY RAIN IN THE LAST 7 DAYS? [X] YES [ ] NO

AIR TEMPERATURE 75 °F

OTHER

SITE LOCATION MAP

PROVIDE A PLAN VIEW SKETCH WITH A NORTH ARROW (INDICATE DIRECTIONS OF PHOTOGRAPHS)

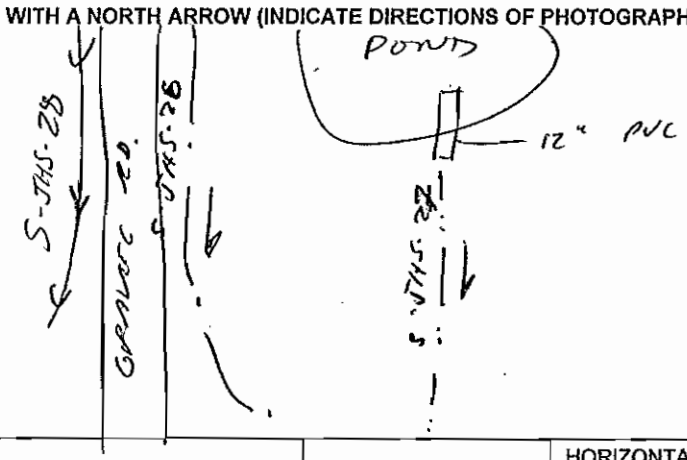

FOR LINEAR PROJECTS, PROVIDE DIMENSIONS AT THE CENTERLINE OF THE STREAM CROSSING.

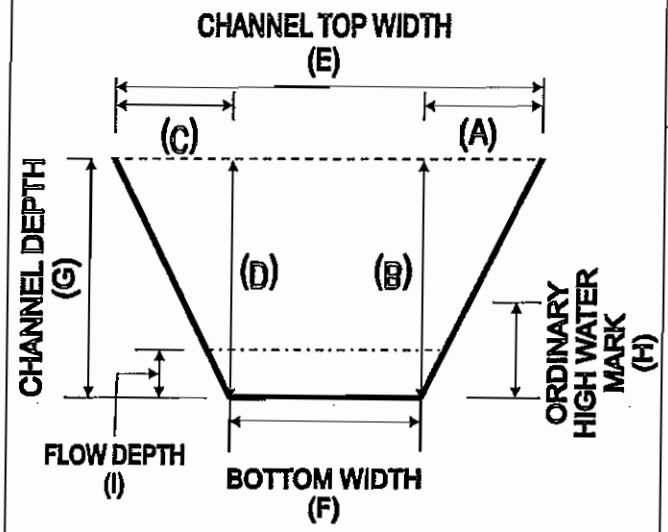

RIGHT BANK (FACE DOWNSTREAM)	HORIZONTAL (A)	0.25	FT.
	VERTICAL (B)	0.25	FT.
LEFT BANK (FACE DOWNSTREAM)	HORIZONTAL (C)	0.25	FT.
	VERTICAL (D)	0.25	FT.
CHANNEL DIMENSIONS	TOP WIDTH (E)	1.0	FT.
	BOTTOM WIDTH (F)	0.50	FT.
	OVERALL DEPTH (G)	0.25	FT.
	ORDINARY HIGH WATER MARK (H)	0.25	FT.
	FLOW DEPTH (I)	0.1	FT.
	APPROX. SURFACE VELOCITY	<5	FT./SEC

STREAM CHARACTERIZATION

STREAM SUBSYSTEM
- [ ] 1 PERENNIAL
- [ ] 2 EPHEMERAL
- [X] 3 INTERMITTENT
- [ ] 4 TIDAL

STREAM TYPE
- [ ] 1 COLD WATER
- [X] 2 WARM WATER

CATCHMENT AREA ____ SQ. MI.

STREAM ORIGIN
- [ ] 1 GLACIAL
- [ ] 2 NON-GLACIAL MONTANE
- [ ] 3 SWAMP AND BOG
- [X] 4 SPRING FED
- [ ] 5 MIXTURE OF ORIGINS
- [X] 6 OTHER POND OUTFLOW

STREAM ID: S-JdS-27

PHYSICAL CHARACTERIZATION/WATER QUALITY FIELD DATA SHEET

WATERSHED FEATURES

PREDOMINANT SURROUNDING LANDUSE: [ ] FOREST [ ] COMMERCIAL [X] FIELD/PASTURE [ ] INDUSTRIAL [ ] AGRICULTURAL [ ] OTHER [ ] RESIDENTIAL

LOCAL WATERSHED NPS POLLUTION: [X] NO EVIDENCE [ ] SOME POTENTIAL SOURCES [ ] OBVIOUS SOURCES

LOCAL WATERSHED EROSION: [X] NONE [ ] MODERATE [ ] HEAVY

RIPARIAN VEG. (18 M. BUFFER)

INDICATE THE DOMINANT TYPE AND RECORD THE DOMINANT SPECIES PRESENT: [ ] TREES [ ] SHRUBS [X] GRASSES [ ] HERBACEOUS

DOMINANT SPECIES PRESENT? Fescue SP

INSTREAM FEATURES

STUDY LENGTH: ~100 FT.

STREAM WIDTH: 1.0 FT.

STUDY REACH AREA: – AC.

EST. DRAINAGE AREA: – SQ. MI.

MACROINVERTEBRATES PRESENT?: [ ] YES [X] NO

TAXA PRESENT: –

CANOPY COVER: [X] OPEN [ ] PARTLY OPEN [ ] PARTLY SHADED [ ] SHADED

PROPERTIES OF REACH, STREAM MORPHOLOGY TYPES: [X] RIFFLE 100 % [ ] RUN – %; [ ] POOL – %

CHANNELIZED: [ ] YES [ ] NO

DAM PRESENT: [ ] YES [ ] NO

LARGE WOODY DEBRIS

LWD: – FT.^{2}

DENSITY OF LWD: – FT.^{2}/MI.^{2}

AQUATIC VEGETATON

INDICATE THE DOMINANT TYPE AND RECORD THE DOMINANT SPECIES PRESENT: [ ] ROOTED EMERGENT [ ] ROOTED SUBMERGENT [ ] ROOTED FLOATING [ ] FLOATING ALGAE [ ] ATTACHED ALGAE [ ] FREE FLOATING

DOMINANT SPECIES PRESENT

PORTION OF THE REACH WITH AQUATIC VEGETATION %

WATER QUALITY

TEMPERATURE °C

SPEC. CONDUCTANCE

DISSOLVED OXYGEN

pH

TURBIDITY

WQ INSTRUMENT USED

WATER ODORS: [X] NORMAL/NONE [ ] SEWAGE [ ] PETROLEUM [ ] CHEMICAL [ ] FISHY [ ] OTHER

WATER SURFACE OILS: [X] SLICK [ ] SHEEN - Oily [ ] GLOBS [ ] FLECKS [X] NONE [ ] OTHER

TURBIDITY (IF NOT MEASURED): [X] CLEAR [ ] SLIGHTLY TURBID [ ] TURBID [ ] OPAQUE [ ] STAINED [ ] OTHER

SEDIMENT/ SUBSTRATE

ODORS: [X] NORMAL [ ] ANAEROBIC [ ] SEWAGE [ ] NONE [ ] PETROLEUM [ ] CHEMICAL [ ] OTHER

DEPOSITS: [ ] SLUDGE [ ] SAWDUST [ ] ~~PAPER FIBER~~ [ ] ~~SAND~~ [ ] ~~RELICT SHELLS~~ [ ] OTHER

OILS: [X] ABSENT [ ] SLIGHT [ ] MODERATE [ ] PROFUSE

UNDERSIDES OF NON-EMBEDDED STONES BLACK IN COLOR? [ ] YES [X] NO

INORGANIC SUBSTRATE COMPONENTS (ADD TO 100%)			ORGANIC SUBSTRATE COMPONENTS (MAY ADD TO LESS THAN 100%)		
SUBSTRATE TYPE	DIAMETER	% COMPOSITION IN SAMPLING REACH	SUBSTRATE TYPE	CHARACTERISTIC	% COMPOSITION IN SAMPLING REACH
BEDROCK	-	–	DETRITUS	STICKS, WOOD, COARSE PLANT MATERIALS (CPOM)	40
BOULDER	256 MM (10"+)	–			
COBBLE	64 – 256 MM (2.5 – 10")	–	MUCK - MUD	BLACK, VERY FINE ORGANIC (FPOM)	–
GRAVEL	2 – 64 MM (0.1 – 2.5")	75			
SAND	0.06 -0 2 MM (GRITTY)	–			
SILT	0.004 – 0.06 MM	20	MARL	GREY, SHELL FRAGMENTS	–
CLAY	<0.004 MM (SLICK)	5			

5 · JHS · 27

Riverine Assessment Form

Pennsylvania Riverine Condition Level 1 Rapid Assessment Version 1.0

For use in wadeable channels classified as intermittent or perennial

Project #	Project Name	Locality	HUC	Date	AA #	AA length
A11J	PTC ALLEGHENY/ TUNNEL				5-JHS-27	

Name(s) of Evaluator(s)	Steam Name and Information
SRC, DLM, LAH	5 JHS·27 UNT TO RAYSTOWN BRANCH OF JUNIATA RIVER

1. RIPARIAN VEGETATION: Assess the floodplain along the entire SAR (Visual estimates of areal covergae from aerial photos with field verified acceptable).

Conditional Category	Optimal	Suboptimal		Marginal		Poor		NOTES>>
Riparian Vegetation (Floodplain)	Tree stratum (dbh > 3 inches) present, with > 60% tree canopy cover. Wetlands and stream channels located within the riparian areas.	**High Suboptimal:** Riparian areas with tree stratum (dbh > 3 inches) present, with 30% to 60% tree canopy cover and containing both herbaceous and shrub layers or a non-maintained understory.	**Low Suboptimal:** Riparian areas with tree stratum (dbh > 3 inches) present, with 30% to 60% tree canopy cover and a maintained understory. Recent cutover (dense vegetation).	**High Marginal:** Non-maintained, dense herbaceous vegetation with either a shrub layer or a tree layer (dbh > 3 inches) present, with <30% tree canopy cover.	**Low Marginal:** Non-maintained, dense herbaceous vegetation, riparian areas lacking shrub and tree stratum, hay production, ponds, open water. If present, tree stratum (dbh >3 inches) present, with <30% tree canopy cover with maintained understory.	**High Poor:** Lawns, mowed, and maintained areas, nurseries; no-till cropland; actively grazed pasture, sparsely vegetated non-maintained area, recently seeded and stabilized, or other comparable condition.	**Low Poor:** Impervious surfaces, mine spoil lands, denuded surfaces, row crops, active feed lots, trails, or other comparable conditions.	
		High	Low	High	Low	High	Low	
Scores	20 19 18 17 16	15 14	13 12 11	10 9 8	7 6	5 4 3	2 1	

1. Identify Condition Category areas along the floodplain using the descriptors above.
2. Estimate the % area within each condition category. Calculators are provided for you below.
3. Enter the % Riparian Area and Score for each category in the blocks below.

Ensure the sums of % Riparian Blocks equal 100

Right Side	% Riparian Area>	1.00						100.0%		
	Score >	3						3		
									CI= Sum (Rt and Lt sub-Indexes)/2	
Left Side	% Riparian Area>	1.00						100.0%	Rt Sub-Index> 0.00	CI
	Score >	3						3	Lt Sub-Index> 0.00	0.00

0.15

2. RIPARIAN ZONE OF INFLUENCE: Assess land cover along both sides, 100 foot from edge of floodplain into the upland along the entire SAR (Visual estimates of areal covergae from aerial photos with field verified acceptable).

Conditional Category	Optimal	Suboptimal		Marginal		Poor		NOTES>>
Riparian ZOI	Tree stratum (dbh > 3 inches) present, with > 60% tree canopy cover. Wetlands and stream channels located within the riparian areas.	**High Suboptimal:** Riparian areas with tree stratum (dbh > 3 inches) present, with 30% to 60% tree canopy cover and containing both herbaceous and shrub layers or a non-maintained understory.	**Low Suboptimal:** Riparian areas with tree stratum (dbh > 3 inches) present, with 30% to 60% tree canopy cover and a maintained understory. Recent cutover (dense vegetation).	**High Marginal:** Non-maintained, dense herbaceous vegetation with either a shrub layer or a tree layer (dbh > 3 inches) present, with <30% tree canopy cover.	**Low Marginal:** Non-maintained, dense herbaceous vegetation, riparian areas lacking shrub and tree stratum, hay production, ponds, open water. If present, tree stratum (dbh >3 inches) present, with <30% tree canopy cover with maintained understory.	**High Poor:** Lawns, mowed, and maintained areas, nurseries; no-till cropland; actively grazed pasture, sparsely vegetated non-maintained area, recently seeded and stabilized, or other comparable condition.	**Low Poor:** Impervious surfaces, mine spoil lands, denuded surfaces, row crops, active feed lots, trails, or other comparable conditions.	
		High	Low	High	Low	High	Low	
Score	20 19 18 17 16	15 14	13 12 11	10 9 8	7 6	5 4 3	2 1	

1. Identify Condition Category areas along each side of the Riparian ZOI using the descriptors above.
2. Estimate the % area within each condition category. Calculators are provided for you below.
3. Enter the % Riparian ZOI Area and Score for each condition category observed in the blocks below.

Ensure the sums of % Riparian ZOI Blocks equal 100

Right Side	% Riparian Area>	1.00						100.0%		
	Score >	3						3		
									CI= Sum (Rt and Lt sub-Indexes)/2	
Left Side	% Riparian Area>	0.70	0.30					100.0%	Rt Sub-Index> 0.00	CI
	Score >	14	3					10.7	Lt Sub-Index> 0.54	0.00

0.34

Comments:

ZOI CONSISTS OF POND EMBANKMENT (MAN-MADE) W/ UPLAND, DECIDUOUS FOREST.

RIPARIAN ECOTONE CONDITION INDEX		RECI
NOTE: **The CIs and RECI should be rounded to 2 decimal places.**	**THE RIPARIAN ECOTONE CONDITION INDEX (RECI) RECI = (Sum of CI's)/2**	0.00

0.25

S-JHS-27 overview, facing upstream.

S-JHS-27 overview, facing downstream.

STREAM S-JHS-28

PHYSICAL CHARACTERIZATION/WATER QUALITY FIELD DATA SHEET

STREAM NAME	S. JHS-28			CLIENT	PTC
STREAM CLASS	EPHEMERAL			PROJECT	Allegheny Tunnel
INVESTIGATORS	SRC DCW LAU	DATE	05.22.12 MM/DD/YR	LOCATION	Somerset County, PA
		TIME	14:35 24 HOUR (I.E. 16:45)		
LATITUDE		LONGITUDE		RIVER BASIN	RAYSTOWN BR. JUNIATA R.
STATION #	-	RIVERMILE	-	STORET #	-

WEATHER CONDITIONS

NOW		PAST 24 HOURS
[ ] 4	STORM (HEAVY RAIN)	[ ] 4
[ ] 2	RAIN (STEADY RAIN)	[ ] 3
[ ] 3	SHOWERS (INTERMITTENT)	[ ] 2
[X] 100	% CLOUD COVER 100	[X] 1
[ ] 1	CLEAR/SUNNY	[ ] 1

HAS THERE BEEN A HEAVY RAIN IN THE LAST 7 DAYS? [X] YES [ ] NO

AIR TEMPERATURE 75 °F

OTHER

SITE LOCATION MAP

PROVIDE A PLAN VIEW SKETCH WITH A NORTH ARROW (INDICATE DIRECTIONS OF PHOTOGRAPHS)

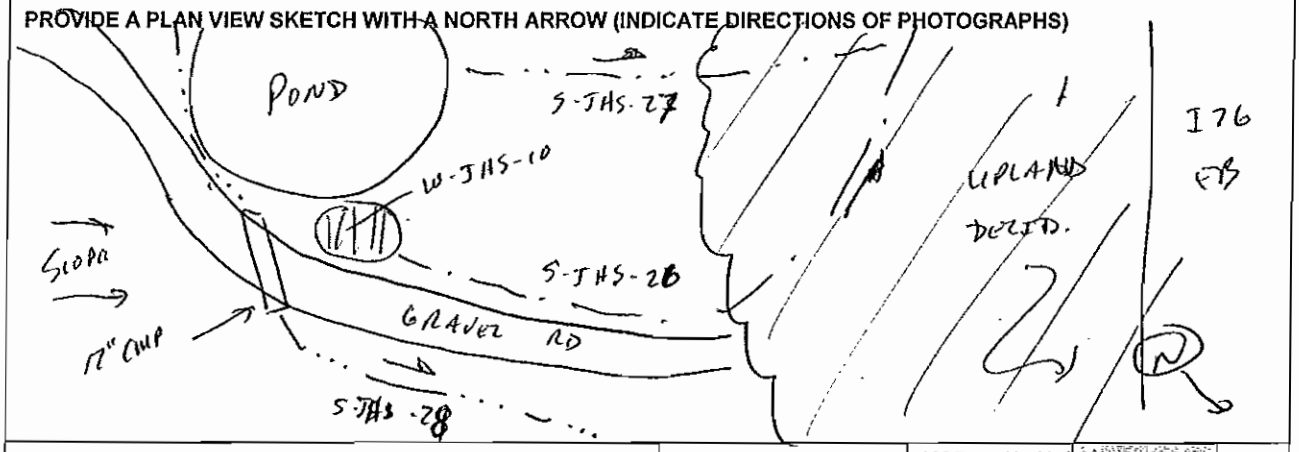

FOR LINEAR PROJECTS, PROVIDE DIMENSIONS AT THE CENTERLINE OF THE STREAM CROSSING.

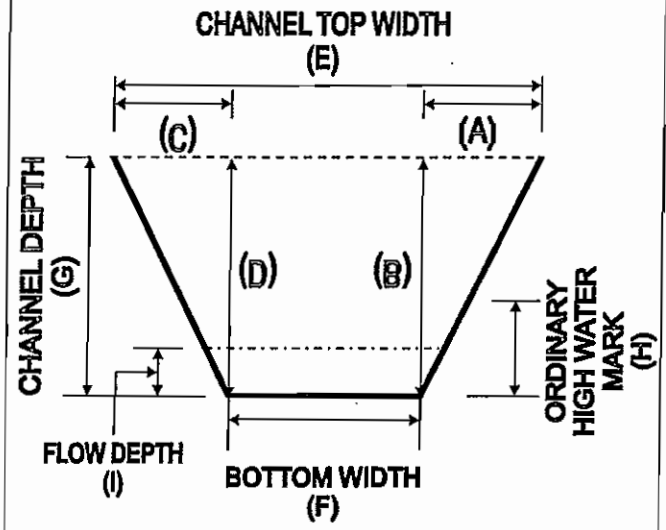

RIGHT BANK (FACE DOWNSTREAM)	HORIZONTAL (A)	0.5	FT.
	VERTICAL (B)	1.0	FT.
LEFT BANK (FACE DOWNSTREAM)	HORIZONTAL (C)	0.5	FT.
	VERTICAL (D)	1.0	FT.
CHANNEL DIMENSIONS	TOP WIDTH (E)	2.5	FT.
	BOTTOM WIDTH (F)	1.5	FT.
	OVERALL DEPTH (G)	1.0	FT.
	ORDINARY HIGH WATER MARK (H)	0.75	FT.
	FLOW DEPTH (I)	Ø	FT.
	APPROX. SURFACE VELOCITY	Ø	FT./SEC

STREAM CHARACTERIZATION

STREAM SUBSYSTEM
- [ ] 1 PERENNIAL
- [X] 2 EPHEMERAL
- [ ] 3 INTERMITTENT
- [ ] 4 TIDAL

STREAM TYPE
- [ ] 1 COLD WATER
- [X] 2 WARM WATER

CATCHMENT AREA [ ] SQ. MI.

STREAM ORIGIN
- [ ] 1 GLACIAL
- [ ] 2 NON-GLACIAL MONTANE
- [ ] 3 SWAMP AND BOG
- [ ] 4 SPRING FED
- [ ] 5 MIXTURE OF ORIGINS
- [X] 6 OTHER STORMWATER

STREAM ID: S - JHS - 28

PHYSICAL CHARACTERIZATION/WATER QUALITY FIELD DATA SHEET

WATERSHED FEATURES

PREDOMINANT SURROUNDING LANDUSE: [ ] FOREST [ ] COMMERCIAL [X] FIELD/PASTURE [ ] INDUSTRIAL [ ] AGRICULTURAL [ ] OTHER [ ] RESIDENTIAL

LOCAL WATERSHED NPS POLLUTION: [ ] NO EVIDENCE [X] SOME POTENTIAL SOURCES [ ] OBVIOUS SOURCES

LOCAL WATERSHED EROSION: [ ] NONE [X] MODERATE [ ] HEAVY

RIPARIAN VEG. (18 M. BUFFER)

INDICATE THE DOMINANT TYPE AND RECORD THE DOMINANT SPECIES PRESENT: [ ] TREES [ ] SHRUBS [X] GRASSES [ ] HERBACEOUS

DOMINANT SPECIES PRESENT? Fescue sp.

INSTREAM FEATURES

STUDY LENGTH: ~300 FT.

STREAM WIDTH: 1.5 FT.

STUDY REACH AREA: – AC.

EST. DRAINAGE AREA: – SQ. MI.

MACROINVERTEBRATES PRESENT?: [ ] YES [X] NO

TAXA PRESENT: –

CANOPY COVER: [X] OPEN [ ] PARTLY OPEN [ ] PARTLY SHADED [ ] SHADED

PROPERTIES OF REACH, STREAM MORPHOLOGY TYPES: [ ] RIFFLE % [ ] RUN %; [ ] POOL %

CHANNELIZED: [ ] YES [ ] NO

DAM PRESENT: [ ] YES [ ] NO

LARGE WOODY DEBRIS

LWD: – FT.^{2}

DENSITY OF LWD: – FT.^{2}/MI.^{2}

AQUATIC VEGETATON

INDICATE THE DOMINANT TYPE AND RECORD THE DOMINANT SPECIES PRESENT: [ ] ROOTED EMERGENT [ ] ROOTED SUBMERGENT [ ] ROOTED FLOATING [ ] FLOATING ALGAE [ ] ATTACHED ALGAE [ ] FREE FLOATING

DOMINANT SPECIES PRESENT

PORTION OF THE REACH WITH AQUATIC VEGETATION %

WATER QUALITY

TEMPERATURE °C

SPEC. CONDUCTANCE

DISSOLVED OXYGEN

pH

TURBIDITY

WQ INSTRUMENT USED

WATER ODORS: [ ] NORMAL/NONE [ ] SEWAGE [ ] PETROLEUM [ ] CHEMICAL [ ] FISHY [ ] OTHER

WATER SURFACE OILS: [ ] SLICK [ ] SHEEN - Oily [ ] GLOBS [ ] FLECKS [ ] NONE [ ] OTHER

TURBIDITY (IF NOT MEASURED): [ ] CLEAR [ ] SLIGHTLY TURBID [ ] TURBID [ ] OPAQUE [ ] STAINED [ ] OTHER

SEDIMENT/ SUBSTRATE

ODORS: [X] NORMAL [ ] ANAEROBIC [ ] SEWAGE [ ] NONE [ ] PETROLEUM [ ] CHEMICAL [ ] OTHER

DEPOSITS: [ ] SLUDGE [ ] SAWDUST [ ] PAPER FIBER [ ] SAND [ ] RELICT SHELLS [ ] OTHER

OILS: [X] ABSENT [ ] SLIGHT [ ] MODERATE [ ] PROFUSE

UNDERSIDES OF NON-EMBEDDED STONES BLACK IN COLOR? [ ] YES [X] NO

INORGANIC SUBSTRATE COMPONENTS (ADD TO 100%)			ORGANIC SUBSTRATE COMPONENTS (MAY ADD TO LESS THAN 100%)		
SUBSTRATE TYPE	DIAMETER	% COMPOSITION IN SAMPLING REACH	SUBSTRATE TYPE	CHARACTERISTIC	% COMPOSITION IN SAMPLING REACH
BEDROCK	-	–	DETRITUS	STICKS, WOOD, COARSE PLANT MATERIALS (CPOM)	<10
BOULDER	256 MM (10"+)	–			
COBBLE	64 – 256 MM (2.5 – 10")	25	MUCK - MUD	BLACK, VERY FINE ORGANIC (FPOM)	–
GRAVEL	2 – 64 MM (0.1 – 2.5")	10			
SAND	0.06 -0 2 MM (GRITTY)	5			
SILT	0.004 – 0.06 MM	10	MARL	GREY, SHELL FRAGMENTS	–
CLAY	<0.004 MM (SLICK)	50			

S-JHS-28

Riverine Assessment Form

Pennsylvania Riverine Condition Level 1 Rapid Assessment Version 1.0

For use in wadeable channels classified as intermittent or perennial

Project #	Project Name	Locality	HUC	Date	AA #	AA length
AHJ	PTC ALLEGHENY TUNNEL			09-23-12	S-JHS-28	

Name(s) of Evaluator(s)	Steam Name and Information
SRC, DLM, LAH	S-JHS-28 UNT TO RAYSTOWN BRANCH OF JUNIATA RIVER

1. RIPARIAN VEGETATION: Assess the floodplain along the entire SAR (Visual estimates of areal covergae from aerial photos with field verified acceptable).

Conditional Category	Optimal	Suboptimal		Marginal		Poor	
Riparian Vegetation (Floodplain)	Tree stratum (dbh > 3 inches) present, with > 60% tree canopy cover. Wetlands and stream channels located within the riparian areas.	**High Suboptimal:** Riparian areas with tree stratum (dbh > 3 inches) present, with 30% to 60% tree canopy cover and containing both herbaceous and shrub layers or a non-maintained understory.	**Low Suboptimal:** Riparian areas with tree stratum (dbh > 3 inches) present, with 30% to 60% tree canopy cover and a maintained understory. Recent cutover (dense vegetation).	**High Marginal:** Non-maintained, dense herbaceous vegetation with either a shrub layer or a tree layer (dbh > 3 inches) present, with <30% tree canopy cover.	**Low Marginal:** Non-maintained, dense herbaceous vegetation, riparian areas lacking shrub and tree stratum, hay production, ponds, open water. If present, tree stratum (dbh >3 inches) present, with <30% tree canopy cover with maintained understory.	**High Poor:** Lawns, mowed, and maintained areas, nurseries; no-till cropland; actively grazed pasture, sparsely vegetated non-maintained area, recently seeded and stabilized, or other comparable condition.	**Low Poor:** Impervious surfaces, mine spoil lands, denuded surfaces, row crops, active feed lots, trails, or other comparable conditions.
		High	Low	High	Low	High	Low
Scores	20 19 18 17 16	15 14	13 12 11	10 9 8	7 6	5 4 3	2 1

NOTES>>

1. Identify Condition Category areas along the floodplain using the descriptors above.
2. Estimate the % area within each condition category. Calculators are provided for you below.
3. Enter the % Riparian Area and Score for each category in the blocks below.

Ensure the sums of % Riparian Blocks equal 100

Right Side	% Riparian Area>	0.70	0.30					100 0%		
	Score >	14	3					10.7		
									CI= Sum (Rt and Lt sub-Indexes)/2	
Left Side	% Riparian Area>	0.70	0.30					100 0%	Rt Sub-Index> 0.00	CI
	Score >	14	3					10.7	Lt Sub-Index> 0.00	0.00

0.54

2. RIPARIAN ZONE OF INFLUENCE: Assess land cover along both sides, 100 foot from edge of floodplain into the upland along the entire SAR (Visual estimates of areal covergae from aerial photos with field verified acceptable).

Conditional Category	Optimal	Suboptimal		Marginal		Poor	
Riparian ZOI	Tree stratum (dbh > 3 inches) present, with > 60% tree canopy cover. Wetlands and stream channels located within the riparian areas.	**High Suboptimal:** Riparian areas with tree stratum (dbh > 3 inches) present, with 30% to 60% tree canopy cover and containing both herbaceous and shrub layers or a non-maintained understory.	**Low Suboptimal:** Riparian areas with tree stratum (dbh > 3 inches) present, with 30% to 60% tree canopy cover and a maintained understory. Recent cutover (dense vegetation).	**High Marginal:** Non-maintained, dense herbaceous vegetation with either a shrub layer or a tree layer (dbh > 3 inches) present, with <30% tree canopy cover.	**Low Marginal:** Non-maintained, dense herbaceous vegetation, riparian areas lacking shrub and tree stratum, hay production, ponds, open water. If present, tree stratum (dbh >3 inches) present, with <30% tree canopy cover with maintained understory.	**High Poor:** Lawns, mowed, and maintained areas, nurseries; no-till cropland; actively grazed pasture, sparsely vegetated non-maintained area, recently seeded and stabilized, or other comparable condition.	**Low Poor:** Impervious surfaces, mine spoil lands, denuded surfaces, row crops, active feed lots, trails, or other comparable conditions.
		High	Low	High	Low	High	Low
Score	20 19 18 17 16	15 14	13 12 11	10 9 8	7 6	5 4 3	2 1

NOTES>>

1. Identify Condition Category areas along each side of the Riparian ZOI using the descriptors above.
2. Estimate the % area within each condition category. Calculators are provided for you below.
3. Enter the % Riparian ZOI Area and Score for each condition category observed in the blocks below.

Ensure the sums of % Riparian ZOI Blocks equal 100

Right Side	% Riparian Area>	0.60	0.20	0.20				100 0%		
	Score >	14	3	1				9.2		
									CI= Sum (Rt and Lt sub-Indexes)/2	
Left Side	% Riparian Area>	0.60	0.20	0.20				100 0%	Rt Sub-Index> 0.00	CI
	Score >	14	3	1				9.2	Lt Sub-Index> 0.00	0.00

0.46

Comments:

ZOI IS PRIMARILY UPLAND, DECIDUOUS FOREST w/ GRAVEL ROAD AND POND EMBANKMENT.

RIPARIAN ECOTONE CONDITION INDEX		RECI
NOTE: The CIs and RECI should be rounded to 2 decimal places.	THE RIPARIAN ECOTONE CONDITION INDEX (RECI) RECI = (Sum of CI's)/2	0.00

0.50

S-JHS-28 overview, facing upstream.

S-JHS-28 overview, facing downstream.

STREAM S-JHS-29

PHYSICAL CHARACTERIZATION/WATER QUALITY FIELD DATA SHEET

STREAM NAME	S-JHS-25 29			CLIENT	PTC
STREAM CLASS	ephemeral			PROJECT	Allegheny Tunnel
INVESTIGATORS	SRC, DLW	DATE	5/24/12 MM/DD/YR	LOCATION	Somerset County, PA
		TIME	11:34 24 HOUR (I.E. 16:45)		
LATITUDE		LONGITUDE		RIVER BASIN	STONY CREEK R.
STATION #	-	RIVERMILE	-	STORET #	-

WEATHER CONDITIONS

NOW		PAST 24 HOURS
☐	STORM (HEAVY RAIN)	☐
☐	RAIN (STEADY RAIN)	☐
☐	SHOWERS (INTERMITTENT)	☐
☒ 50	% CLOUD COVER 90	☒
☐	CLEAR/SUNNY	☐

HAS THERE BEEN A HEAVY RAIN IN THE LAST 7 DAYS? ☒ YES ☐ NO

AIR TEMPERATURE 70 °F

OTHER

SITE LOCATION MAP

PROVIDE A PLAN VIEW SKETCH WITH A NORTH ARROW (INDICATE DIRECTIONS OF PHOTOGRAPHS)

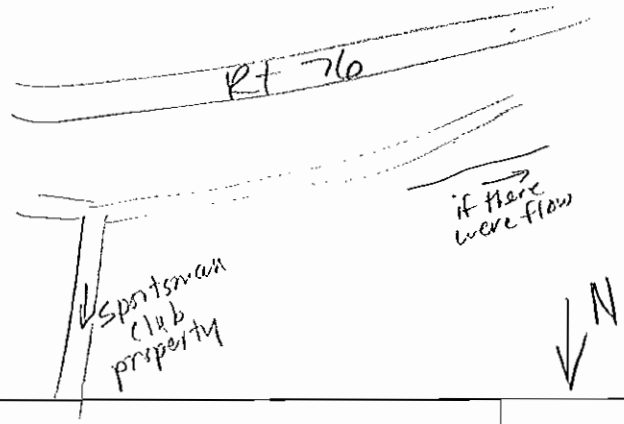

FOR LINEAR PROJECTS, PROVIDE DIMENSIONS AT THE CENTERLINE OF THE STREAM CROSSING.

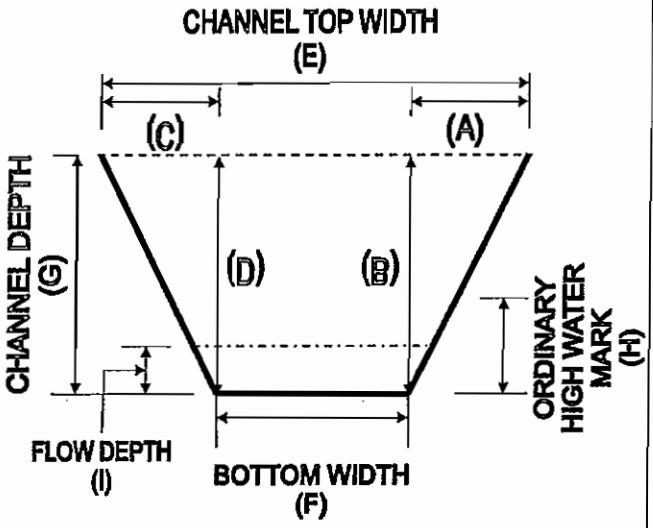

RIGHT BANK (FACE DOWNSTREAM)	HORIZONTAL (A)	2.0 ft	FT.
	VERTICAL (B)	2.0 ft	FT.
LEFT BANK (FACE DOWNSTREAM)	HORIZONTAL (C)	3.0 ft	FT.
	VERTICAL (D)	2.5 ft	FT.
CHANNEL DIMENSIONS	TOP WIDTH (E)	8.0 ft	FT.
	BOTTOM WIDTH (F)	3.0 ft	FT.
	OVERALL DEPTH (G)	2.0 ft	FT.
	ORDINARY HIGH WATER MARK (H)	1.0 ft	FT.
	FLOW DEPTH (I)	—	FT.
	APPROX. SURFACE VELOCITY	—	FT./SEC

STREAM CHARACTERIZATION

STREAM SUBSYSTEM
- ☐ PERENNIAL
- ☒ EPHEMERAL
- ☐ INTERMITTENT
- ☐ TIDAL

STREAM TYPE
- ☐ COLD WATER
- ☐ WARM WATER

CATCHMENT AREA SQ. MI.

STREAM ORIGIN
- ☐ GLACIAL
- ☐ NON-GLACIAL MONTANE
- ☐ SWAMP AND BOG
- ☐ SPRING FED
- ☐ MIXTURE OF ORIGINS
- ☒ OTHER storm flow

STREAM ID: S-JHS-2529

PHYSICAL CHARACTERIZATION/WATER QUALITY FIELD DATA SHEET

WATERSHED FEATURES

PREDOMINANT SURROUNDING LANDUSE
- [x] FOREST
- [ ] FIELD/PASTURE
- [ ] AGRICULTURAL
- [ ] RESIDENTIAL
- [ ] COMMERCIAL
- [ ] INDUSTRIAL
- [x] OTHER

LOCAL WATERSHED NPS POLLUTION
- [x] NO EVIDENCE
- [ ] SOME POTENTIAL SOURCES
- [ ] OBVIOUS SOURCES

LOCAL WATERSHED EROSION
- [ ] NONE
- [ ] MODERATE
- [ ] HEAVY

RIPARIAN VEG. (18 M. BUFFER)

INDICATE THE DOMINANT TYPE AND RECORD THE DOMINANT SPECIES PRESENT
- [x] TREES
- [ ] SHRUBS
- [ ] GRASSES
- [x] HERBACEOUS

DOMINANT SPECIES PRESENT? sweetgum goldenrod white elderberry arrowwood

INSTREAM FEATURES

STUDY LENGTH		FT.
STREAM WIDTH	3.08	FT.
STUDY REACH AREA		AC.
EST. DRAINAGE AREA	—	SQ. MI.
MACROINVERTEBRATES PRESENT?	[ ] YES [x] NO	
TAXA PRESENT	—	

CANOPY COVER
- [ ] OPEN
- [ ] PARTLY OPEN
- [ ] PARTLY SHADED
- [x] SHADED

PROPERTIES OF REACH, STREAM MORPHOLOGY TYPES
- [ ] RIFFLE %
- [ ] POOL %
- [ ] RUN %
- CHANNELIZED [ ] YES [ ] NO
- DAM PRESENT [ ] YES [ ] NO

LARGE WOODY DEBRIS

LWD	—	FT.^{2}
DENSITY OF LWD	—	FT.^{2}/MI.^{2}

AQUATIC VEGETATON

INDICATE THE DOMINANT TYPE AND RECORD THE DOMINANT SPECIES PRESENT
- [x] ROOTED EMERGENT
- [ ] FLOATING ALGAE
- [ ] ROOTED SUBMERGENT
- [ ] ATTACHED ALGAE
- [ ] ROOTED FLOATING
- [ ] FREE FLOATING

DOMINANT SPECIES PRESENT sphagnum

PORTION OF THE REACH WITH AQUATIC VEGETATION 10 %

WATER QUALITY

TEMPERATURE		°C
SPEC. CONDUCTANCE		
DISSOLVED OXYGEN		
pH		
TURBIDITY		
WQ INSTRUMENT USED		

WATER ODORS
- [ ] NORMAL/NONE
- [ ] PETROLEUM
- [ ] FISHY
- [ ] SEWAGE
- [ ] CHEMICAL
- [ ] OTHER

WATER SURFACE OILS
- [ ] SLICK
- [ ] GLOBS
- [ ] NONE
- [ ] SHEEN - Oily
- [ ] FLECKS
- [ ] OTHER

TURBIDITY (IF NOT MEASURED)
- [ ] CLEAR
- [ ] TURBID
- [ ] STAINED
- [ ] SLIGHTLY TURBID
- [ ] OPAQUE
- [ ] OTHER

SEDIMENT/ SUBSTRATE

ODORS
- [x] NORMAL
- [ ] SEWAGE
- [ ] PETROLEUM
- [ ] OTHER
- [ ] ANAEROBIC
- [ ] NONE
- [ ] CHEMICAL

DEPOSITS
- [ ] SLUDGE
- [ ] PAPER FIBER
- [ ] RELICT SHELLS
- [x] OTHER gravel pile, soil, rocks dumped in channel
- [ ] SAWDUST
- [ ] SAND

OILS
- [x] ABSENT
- [ ] MODERATE
- [ ] SLIGHT
- [ ] PROFUSE

UNDERSIDES OF NON-EMBEDDED STONES BLACK IN COLOR?
- [ ] YES
- [x] NO

INORGANIC SUBSTRATE COMPONENTS (ADD TO 100%)			ORGANIC SUBSTRATE COMPONENTS (MAY ADD TO LESS THAN 100%)		
SUBSTRATE TYPE	DIAMETER	% COMPOSITION IN SAMPLING REACH	SUBSTRATE TYPE	CHARACTERISTIC	% COMPOSITION IN SAMPLING REACH
BEDROCK	-	5	DETRITUS	STICKS, WOOD, COARSE PLANT MATERIALS (CPOM)	leaves 75%
BOULDER	256 MM (10"+)	25			
COBBLE	64 – 256 MM (2.5 – 10")	25	MUCK - MUD	BLACK, VERY FINE ORGANIC (FPOM)	—
GRAVEL	2 – 64 MM (0.1 – 2.5")	10			
SAND	0.06 -0 2 MM (GRITTY)	20			
SILT	0.004 – 0.06 MM	15	MARL	GREY, SHELL FRAGMENTS	—
CLAY	<0.004 MM (SLICK)	—			

S-JHS-29

Riverine Assessment Form

Pennsylvania Riverine Condition Level 1 Rapid Assessment Version 1.0

For use in wadeable channels classified as intermittent or perennial

Project #	Project Name	Locality	HUC	Date	AA #	AA length
A115	PTC ALLEGHENY TUNNEL			05.24.12	S-JHS-29	

Name(s) of Evaluator(s)	Steam Name and Information
DLM, SRC	S-JHS-29 UNT TO STONEY CREEK RIVER

1. RIPARIAN VEGETATION: Assess the floodplain along the entire SAR (Visual estimates of areal covergae from aerial photos with field verified acceptable).

	Conditional Category								NOTES>>
	Optimal	Suboptimal		Marginal		Poor			
Riparian Vegetation (Floodplain)	Tree stratum (dbh > 3 inches) present, with > 60% tree canopy cover. Wetlands and stream channels located within the riparian areas.	**High Suboptimal:** Riparian areas with tree stratum (dbh > 3 inches) present, with 30% to 60% tree canopy cover and containing both herbaceous and shrub layers or a non-maintained understory.	**Low Suboptimal:** Riparian areas with tree stratum (dbh > 3 inches) present, with 30% to 60% tree canopy cover and a maintained understory. Recent cutover (dense vegetation).	**High Marginal:** Non-maintained, dense herbaceous vegetation with either a shrub layer or a tree layer (dbh > 3 inches) present, with <30% tree canopy cover.	**Low Marginal:** Non-maintained, dense herbaceous vegetation, riparian areas lacking shrub and tree stratum, hay production, ponds, open water. If present, tree stratum (dbh >3 inches) present, with <30% tree canopy cover with maintained understory.	**High Poor:** Lawns, mowed, and maintained areas, nurseries; no-till cropland; actively grazed pasture, sparsely vegetated non-maintained area, recently seeded and stabilized, or other comparable condition.	**Low Poor:** Impervious surfaces, mine spoil lands, denuded surfaces, row crops, active feed lots, trails, or other comparable conditions.		
		High	Low	High	Low	High	Low		
Scores	20 19 18 17 16	15 14	13 12 11	10 9 8	7 6	5 4 3	2 1		

1. Identify Condition Category areas along the floodplain using the descriptors above.
2. Estimate the % area within each condition category. Calculators are provided for you below.
3. Enter the % Riparian Area and Score for each category in the blocks below.

Ensure the sums of % Riparian Blocks equal 100

Right Side	% Riparian Area>	1.00						100.0%		
	Score >	13						13		
									CI= Sum (Rt and Lt sub-Indexes)/2	
Left Side	% Riparian Area>	1.00						100.0%	Rt Sub-Index> 0.65	CI
	Score >	13						13	Lt Sub-Index> 0.65	0.65

2. RIPARIAN ZONE OF INFLUENCE: Assess land cover along both sides, 100 foot from edge of floodplain into the upland along the entire SAR (Visual estimates of areal covergae from aerial photos with field verified acceptable).

	Conditional Category								NOTES>>
	Optimal	Suboptimal		Marginal		Poor			
Riparian ZOI	Tree stratum (dbh > 3 inches) present, with > 60% tree canopy cover. Wetlands and stream channels located within the riparian areas.	**High Suboptimal:** Riparian areas with tree stratum (dbh > 3 inches) present, with 30% to 60% tree canopy cover and containing both herbaceous and shrub layers or a non-maintained understory.	**Low Suboptimal:** Riparian areas with tree stratum (dbh > 3 inches) present, with 30% to 60% tree canopy cover and a maintained understory. Recent cutover (dense vegetation).	**High Marginal:** Non-maintained, dense herbaceous vegetation with either a shrub layer or a tree layer (dbh > 3 inches) present, with <30% tree canopy cover.	**Low Marginal:** Non-maintained, dense herbaceous vegetation, riparian areas lacking shrub and tree stratum, hay production, ponds, open water. If present, tree stratum (dbh >3 inches) present, with <30% tree canopy cover with maintained understory.	**High Poor:** Lawns, mowed, and maintained areas, nurseries; no-till cropland; actively grazed pasture, sparsely vegetated non-maintained area, recently seeded and stabilized, or other comparable condition.	**Low Poor:** Impervious surfaces, mine spoil lands, denuded surfaces, row crops, active feed lots, trails, or other comparable conditions.		
		High	Low	High	Low	High	Low		
Score	20 19 18 17 16	15 14	13 12 11	10 9 8	7 6	5 4 3	2 1		

1. Identify Condition Category areas along each side of the Riparian ZOI using the descriptors above.
2. Estimate the % area within each condition category. Calculators are provided for you below.
3. Enter the % Riparian ZOI Area and Score for each condition category observed in the blocks below.

Ensure the sums of % Riparian ZOI Blocks equal 100

Right Side	% Riparian Area>	1.00						100.0%		
	Score >	13						13		
									CI= Sum (Rt and Lt sub-Indexes)/2	
Left Side	% Riparian Area>	0.70	0.30					100.0%	Rt Sub-Index> 0.65	CI
	Score >	13	2					9.7	Lt Sub-Index> 0.48	0.57

Comments:

ZOI IS MOSTLY UPLAND, DECIDUOUS FOREST, ADJ, TO WEST PORTAL ACCESS ROAD.

RIPARIAN ECOTONE CONDITION INDEX		RECI
NOTE: **The CIs and RECI should be rounded to 2 decimals places.**	**THE RIPARIAN ECOTONE CONDITION INDEX (RECI) RECI = (Sum of CI's)/2**	0.61

S-JHS-29 overview, facing upstream.

S-JHS-29 overview, facing downstream.

STREAM S-JHS-30

PHYSICAL CHARACTERIZATION/WATER QUALITY FIELD DATA SHEET

STREAM NAME	S-JHS-26 30			CLIENT	PTC
STREAM CLASS	Intermittent			PROJECT	Allegheny Tunnel
INVESTIGATORS	SRC, DLM	DATE	5/24/12 MM/DD/YR	LOCATION	Somerset County, PA
		TIME	11:52 24 HOUR (I.E. 16:45)		
LATITUDE		LONGITUDE		RIVER BASIN	STONYCREEK RIVER
STATION #		RIVERMILE		STORET #	

WEATHER CONDITIONS	NOW		PAST 24 HOURS
	[ ]	STORM (HEAVY RAIN)	[ ]
	[ ]	RAIN (STEADY RAIN)	[ ]
	[ ]	SHOWERS (INTERMITTENT)	[ ]
	[X] 25	% CLOUD COVER 100	[X]
	[ ]	CLEAR/SUNNY	[ ]

HAS THERE BEEN A HEAVY RAIN IN THE LAST 7 DAYS? [X] YES [ ] NO

AIR TEMPERATURE 68 °F

OTHER

SITE LOCATION MAP

PROVIDE A PLAN VIEW SKETCH WITH A NORTH ARROW (INDICATE DIRECTIONS OF PHOTOGRAPHS)

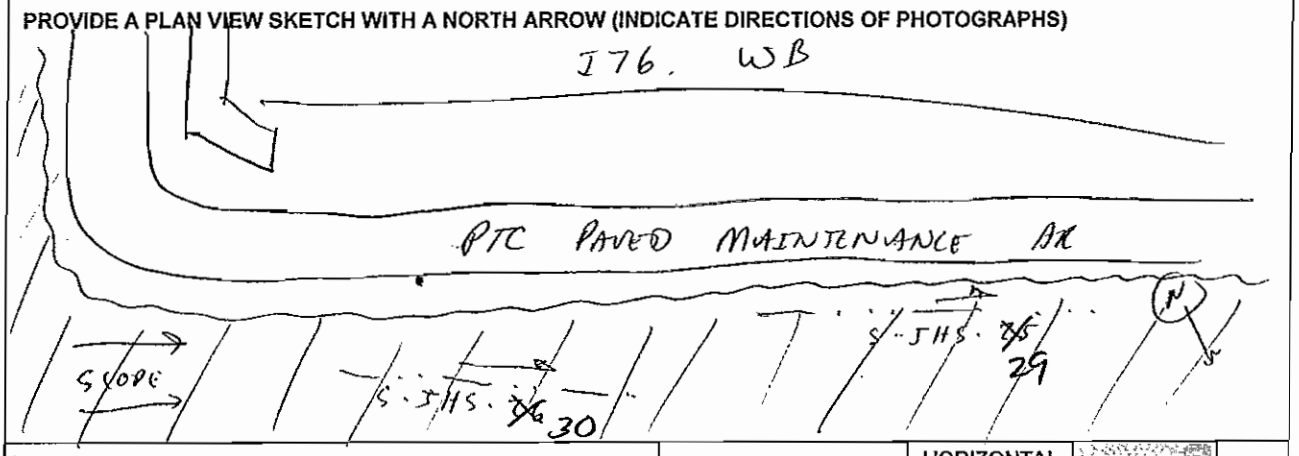

FOR LINEAR PROJECTS, PROVIDE DIMENSIONS AT THE CENTERLINE OF THE STREAM CROSSING.

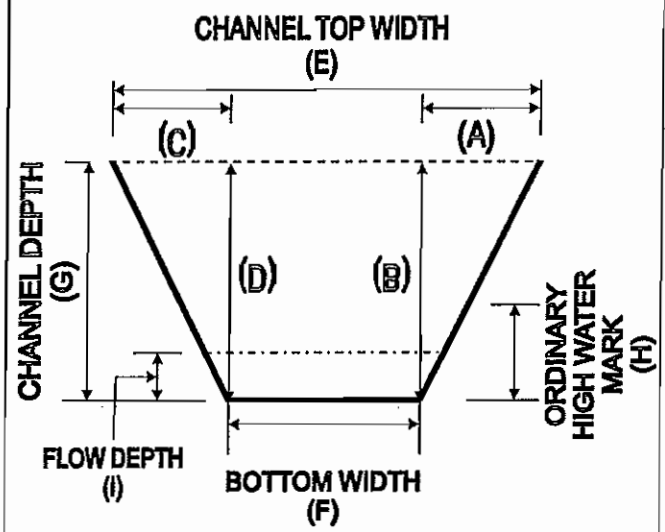

RIGHT BANK (FACE DOWNSTREAM)	HORIZONTAL (A)	0.5	FT.
	VERTICAL (B)	0.5	FT.
LEFT BANK (FACE DOWNSTREAM)	HORIZONTAL (C)	0.5	FT.
	VERTICAL (D)	0.5	FT.
CHANNEL DIMENSIONS	TOP WIDTH (E)	3.0	FT.
	BOTTOM WIDTH (F)	2.6	FT.
	OVERALL DEPTH (G)	0.5	FT.
	ORDINARY HIGH WATER MARK (H)	0.25	FT.
	FLOW DEPTH (I)	0.25	FT.
	APPROX. SURFACE VELOCITY	0	FT./SEC

STREAM CHARACTERIZATION

STREAM SUBSYSTEM
[ ] PERENNIAL [X] INTERMITTENT
[ ] EPHEMERAL [ ] TIDAL

STREAM TYPE
[ ] COLD WATER [X] WARM WATER
CATCHMENT AREA SQ. MI.

STREAM ORIGIN
[ ] GLACIAL [ ] SPRING FED
[ ] NON-GLACIAL MONTANE [ ] MIXTURE OF ORIGINS
[ ] SWAMP AND BOG [X] OTHER STORMWATER

STREAM ID: S-JHS-3630

PHYSICAL CHARACTERIZATION/WATER QUALITY FIELD DATA SHEET

WATERSHED FEATURES

PREDOMINANT SURROUNDING LANDUSE: [X] FOREST [ ] FIELD/PASTURE [ ] AGRICULTURAL [ ] RESIDENTIAL [ ] COMMERCIAL [ ] INDUSTRIAL [X] OTHER transportation

LOCAL WATERSHED NPS POLLUTION: [ ] NO EVIDENCE [X] SOME POTENTIAL SOURCES [ ] OBVIOUS SOURCES

LOCAL WATERSHED EROSION: [ ] NONE [X] MODERATE [ ] HEAVY

RIPARIAN VEG. (18 M. BUFFER)

INDICATE THE DOMINANT TYPE AND RECORD THE DOMINANT SPECIES PRESENT: [X] TREES [ ] SHRUBS [ ] GRASSES [ ] HERBACEOUS

DOMINANT SPECIES PRESENT? SUGAR MAPLE

INSTREAM FEATURES

STUDY LENGTH ~100 FT.

STREAM WIDTH 3.0 FT.

STUDY REACH AREA — AC.

EST. DRAINAGE AREA — SQ. MI.

MACROINVERTEBRATES PRESENT? [ ] YES [X] NO

TAXA PRESENT —

CANOPY COVER: [ ] OPEN [ ] PARTLY OPEN [X] PARTLY SHADED [ ] SHADED

PROPERTIES OF REACH, STREAM MORPHOLOGY TYPES: [ ] RIFFLE % [ ] RUN %; [ ] POOL %

CHANNELIZED [ ] YES [X] NO

DAM PRESENT [ ] YES [X] NO

LARGE WOODY DEBRIS

LWD — FT.^{2}

DENSITY OF LWD — FT.^{2}/MI.^{2}

AQUATIC VEGETATON

INDICATE THE DOMINANT TYPE AND RECORD THE DOMINANT SPECIES PRESENT: [ ] ROOTED EMERGENT [ ] ROOTED SUBMERGENT [ ] ROOTED FLOATING [ ] FLOATING ALGAE [ ] ATTACHED ALGAE [ ] FREE FLOATING

DOMINANT SPECIES PRESENT

PORTION OF THE REACH WITH AQUATIC VEGETATION %

WATER QUALITY

TEMPERATURE °C

SPEC. CONDUCTANCE

DISSOLVED OXYGEN

pH

TURBIDITY

WQ INSTRUMENT USED

WATER ODORS: [X] NORMAL/NONE [ ] PETROLEUM [ ] FISHY [ ] SEWAGE [ ] CHEMICAL [ ] OTHER

WATER SURFACE OILS: [ ] SLICK [ ] GLOBS [X] NONE [ ] SHEEN - Oily [ ] FLECKS [ ] OTHER

TURBIDITY (IF NOT MEASURED): [ ] CLEAR [ ] TURBID [X] STAINED [ ] SLIGHTLY TURBID [ ] OPAQUE [ ] OTHER

SEDIMENT/ SUBSTRATE

ODORS: [X] NORMAL [ ] SEWAGE [ ] PETROLEUM [ ] OTHER [ ] ANAEROBIC [ ] NONE [ ] CHEMICAL

DEPOSITS: [ ] SLUDGE [ ] PAPER FIBER [ ] RELICT SHELLS [ ] OTHER [ ] SAWDUST [ ] SAND

OILS: [X] ABSENT [ ] MODERATE [ ] SLIGHT [ ] PROFUSE

UNDERSIDES OF NON-EMBEDDED STONES BLACK IN COLOR? [ ] YES [X] NO

INORGANIC SUBSTRATE COMPONENTS (ADD TO 100%)			ORGANIC SUBSTRATE COMPONENTS (MAY ADD TO LESS THAN 100%)		
SUBSTRATE TYPE	DIAMETER	% COMPOSITION IN SAMPLING REACH	SUBSTRATE TYPE	CHARACTERISTIC	% COMPOSITION IN SAMPLING REACH
BEDROCK	-	—	DETRITUS	STICKS, WOOD, COARSE PLANT MATERIALS (CPOM)	~80
BOULDER	256 MM (10"+)	25			
COBBLE	64 – 256 MM (2.5 – 10")	25	MUCK - MUD	BLACK, VERY FINE ORGANIC (FPOM)	—
GRAVEL	2 – 64 MM (0.1 – 2.5")	20			
SAND	0.06 -0 2 MM (GRITTY)	—			
SILT	0.004 – 0.06 MM	30	MARL	GREY, SHELL FRAGMENTS	—
CLAY	<0.004 MM (SLICK)	—			

S-JHS-30

Riverine Assessment Form

Pennsylvania Riverine Condition Level 1 Rapid Assessment Version 1.0

For use in wadeable channels classified as intermittent or perennial

Project #	Project Name	Locality	HUC	Date	AA #	AA length
AHJ	PTC ALLEGHENY TUNNEL			05/24/12	S-JHS-30	

Name(s) of Evaluator(s)	Steam Name and Information
DLM, SRC	S-JHS-30 UNT TO STONEY CREEK RIVER

1. RIPARIAN VEGETATION: Assess the floodplain along the entire SAR (Visual estimates of areal covergae from aerial photos with field verified acceptable).

Conditional Category	Optimal	Suboptimal		Marginal		Poor		NOTES>>
Riparian Vegetation (Floodplain)	Tree stratum (dbh > 3 inches) present, with > 60% tree canopy cover. Wetlands and stream channels located within the riparian areas.	**High Suboptimal:** Riparian areas with tree stratum (dbh > 3 inches) present, with 30% to 60% tree canopy cover and containing both herbaceous and shrub layers or a non-maintained understory	**Low Suboptimal:** Riparian areas with tree stratum (dbh > 3 inches) present, with 30% to 60% tree canopy cover and a maintained understory Recent cutover (dense vegetation).	**High Marginal:** Non-maintained, dense herbaceous vegetation with either a shrub layer or a tree layer (dbh > 3 inches) present, with <30% tree canopy cover.	**Low Marginal:** Non-maintained, dense herbaceous vegetation, riparian areas lacking shrub and tree stratum, hay production, ponds, open water. If present, tree stratum (dbh >3 inches) present, with <30% tree canopy cover with maintained understory.	**High Poor:** Lawns, mowed, and maintained areas, nurseries; no-till cropland; actively grazed pasture, sparsely vegetated non-maintained area, recently seeded and stabilized, or other comparable condition.	**Low Poor:** Impervious surfaces, mine spoil lands, denuded surfaces, row crops, active feed lots, trails, or other comparable conditions.	
		High	Low	High	Low	High	Low	
Scores	20 19 18 17 16	15 14 13	12 11	10 9 8	7 6	5 4 3	2 1	

1. Identify Condition Category areas along the floodplain using the descriptors above.
2. Estimate the % area within each condition category. Calculators are provided for you below.
3. Enter the % Riparian Area and Score for each category in the blocks below.

Ensure the sums of % Riparian Blocks equal 100

Right Side	% Riparian Area>	1.00						100 %		
	Score >	13						13		
									CI= Sum (Rt and Lt sub-Indexes)/2	
Left Side	% Riparian Area>	0.60	0.40					100 %	Rt Sub-Index> 0.00 0.00	CI
	Score >	13	3					9	Lt Sub-Index> 0.00 0.00	0.00

0.55

2. RIPARIAN ZONE OF INFLUENCE: Assess land cover along both sides, 100 foot from edge of floodplain into the upland along the entire SAR (Visual estimates of areal covergae from aerial photos with field verified acceptable).

Conditional Category	Optimal	Suboptimal		Marginal		Poor		NOTES>>
Riparian ZOI	Tree stratum (dbh > 3 inches) present, with > 60% tree canopy cover. Wetlands and stream channels located within the riparian areas.	**High Suboptimal:** Riparian areas with tree stratum (dbh > 3 inches) present, with 30% to 60% tree canopy cover and containing both herbaceous and shrub layers or a non-maintained understory	**Low Suboptimal:** Riparian areas with tree stratum (dbh > 3 inches) present, with 30% to 60% tree canopy cover and a maintained understory. Recent cutover (dense vegetation).	**High Marginal:** Non-maintained, dense herbaceous vegetation with either a shrub layer or a tree layer (dbh > 3 inches) present, with <30% tree canopy cover.	**Low Marginal:** Non-maintained, dense herbaceous vegetation, riparian areas lacking shrub and tree stratum, hay production, ponds, open water. If present, tree stratum (dbh >3 inches) present, with <30% tree canopy cover with maintained understory.	**High Poor:** Lawns, mowed, and maintained areas, nurseries; no-till cropland; actively grazed pasture, sparsely vegetated non-maintained area, recently seeded and stabilized, or other comparable condition.	**Low Poor:** Impervious surfaces, mine spoil lands, denuded surfaces, row crops, active feed lots, trails, or other comparable conditions.	
		High	Low	High	Low	High	Low	
Score	20 19 18 17 16	15 14 13	12 11	10 9 8	7 6	5 4 3	2 1	

1. Identify Condition Category areas along each side of the Riparian ZOI using the descriptors above.
2. Estimate the % area within each condition category. Calculators are provided for you below.
3. Enter the % Riparian ZOI Area and Score for each condition category observed in the blocks below.

Ensure the sums of % Riparian ZOI Blocks equal 100

Right Side	% Riparian Area>	1.00						100 %		
	Score >	13						13		
									CI= Sum (Rt and Lt sub-Indexes)/2	
Left Side	% Riparian Area>	0.60	0.40					100 %	Rt Sub-Index> 0.00 0.00	CI
	Score >	13	3					9	Lt Sub-Index> 0.00 0.00	0.00

0.55

Comments:

PRIMARY ZOI IS UPLAND, DECIDUOUS FOREST.

RIPARIAN ECOTONE CONDITION INDEX		RECI
NOTE: The CIs and RECI should be rounded to 2 decimal places.	THE RIPARIAN ECOTONE CONDITION INDEX (RECI) RECI = (Sum of CI's)/2	0.00

0.55

S-JHS-30 overview, facing upstream.

S-JHS-30 overview, facing downstream.

STREAM S-JHS-31

PHYSICAL CHARACTERIZATION/WATER QUALITY FIELD DATA SHEET

STREAM NAME	S. JHS 27 3			CLIENT	PTC
STREAM CLASS	INTERMITTENT			PROJECT	Allegheny Tunnel
INVESTIGATORS	SRC DLM	DATE	05.24.12	MM/DD/YR	LOCATION: Somerset County, PA
		TIME	1214T	24 HOUR (I.E. 16:45)	
LATITUDE		LONGITUDE			RIVER BASIN: STONYCREEK RIVER
STATION #	-	RIVERMILE	-		STORET # -

WEATHER CONDITIONS

NOW		PAST 24 HOURS
[ ]	STORM (HEAVY RAIN)	[ ]
[ ]	RAIN (STEADY RAIN)	[ ]
[ ]	SHOWERS (INTERMITTENT)	[ ]
[X] 25	% CLOUD COVER	100 [X]
[ ]	CLEAR/SUNNY	[ ]

HAS THERE BEEN A HEAVY RAIN IN THE LAST 7 DAYS? [X] YES [ ] NO

AIR TEMPERATURE: 40 °F

OTHER:

SITE LOCATION MAP

PROVIDE A PLAN VIEW SKETCH WITH A NORTH ARROW (INDICATE DIRECTIONS OF PHOTOGRAPHS)

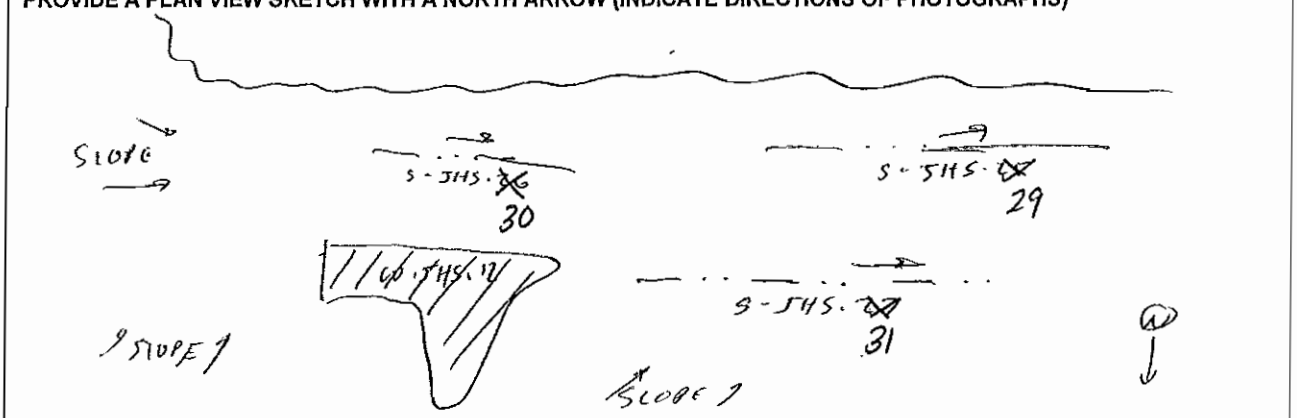

FOR LINEAR PROJECTS, PROVIDE DIMENSIONS AT THE CENTERLINE OF THE STREAM CROSSING.

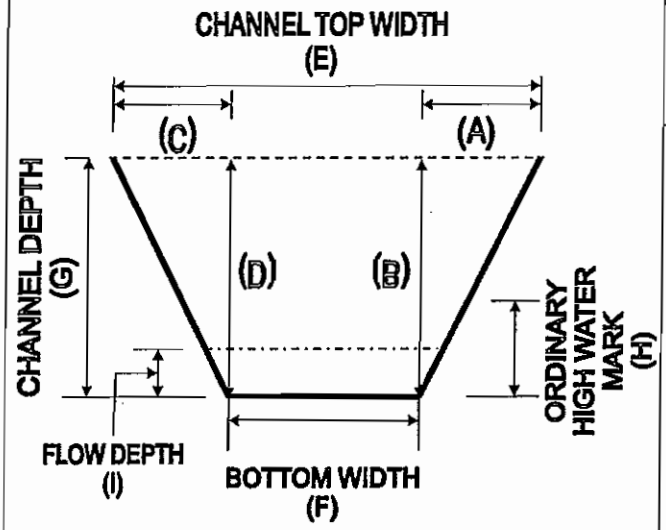

RIGHT BANK (FACE DOWNSTREAM)	HORIZONTAL (A)	1.5	FT.
	VERTICAL (B)	0.75	FT.
LEFT BANK (FACE DOWNSTREAM)	HORIZONTAL (C)	1.5	FT.
	VERTICAL (D)	0.75	FT.
CHANNEL DIMENSIONS	TOP WIDTH (E)	6.0	FT.
	BOTTOM WIDTH (F)	3.0	FT.
	OVERALL DEPTH (G)	0.75	FT.
	ORDINARY HIGH WATER MARK (H)	0.25	FT.
	FLOW DEPTH (I)	0.10	FT.
	APPROX. SURFACE VELOCITY	<.5	FT./SEC

STREAM CHARACTERIZATION

STREAM SUBSYSTEM
- [ ] PERENNIAL
- [ ] EPHEMERAL
- [X] INTERMITTENT
- [ ] TIDAL

STREAM TYPE
- [ ] COLD WATER
- [X] WARM WATER

CATCHMENT AREA: SQ. MI.

STREAM ORIGIN
- [ ] GLACIAL
- [ ] NON-GLACIAL MONTANE
- [ ] SWAMP AND BOG
- [X] SPRING FED
- [ ] MIXTURE OF ORIGINS
- [ ] OTHER

STREAM ID: S-JHS-2731

PHYSICAL CHARACTERIZATION/WATER QUALITY FIELD DATA SHEET

WATERSHED FEATURES

PREDOMINANT SURROUNDING LANDUSE: [X] FOREST [ ] FIELD/PASTURE [ ] AGRICULTURAL [ ] RESIDENTIAL [ ] COMMERCIAL [ ] INDUSTRIAL [ ] OTHER

LOCAL WATERSHED NPS POLLUTION: [X] NO EVIDENCE [ ] SOME POTENTIAL SOURCES [ ] OBVIOUS SOURCES

LOCAL WATERSHED EROSION: [X] NONE [ ] MODERATE [ ] HEAVY

RIPARIAN VEG. (18 M. BUFFER)

INDICATE THE DOMINANT TYPE AND RECORD THE DOMINANT SPECIES PRESENT: [X] TREES [ ] SHRUBS [ ] GRASSES [ ] HERBACEOUS

DOMINANT SPECIES PRESENT? SUGAR MAPLE, HAY-SCENTED FERN

INSTREAM FEATURES

STUDY LENGTH: 200 FT.

STREAM WIDTH: 6.0 FT.

STUDY REACH AREA: - AC.

EST. DRAINAGE AREA: - SQ. MI.

MACROINVERTEBRATES PRESENT? [ ] YES [X] NO

TAXA PRESENT: —

CANOPY COVER: [ ] OPEN [ ] PARTLY OPEN [ ] PARTLY SHADED [X] SHADED

PROPERTIES OF REACH, STREAM MORPHOLOGY TYPES: [X] RIFFLE 100 % [ ] RUN % [ ] POOL %

CHANNELIZED [ ] YES [X] NO

DAM PRESENT [ ] YES [X] NO

LARGE WOODY DEBRIS

LWD: — FT.^{2}

DENSITY OF LWD: - FT.^{2}/MI.^{2}

AQUATIC VEGETATON

INDICATE THE DOMINANT TYPE AND RECORD THE DOMINANT SPECIES PRESENT: [ ] ROOTED EMERGENT [ ] ROOTED SUBMERGENT [ ] ROOTED FLOATING [ ] FLOATING ALGAE [ ] ATTACHED ALGAE [ ] FREE FLOATING

DOMINANT SPECIES PRESENT

PORTION OF THE REACH WITH AQUATIC VEGETATION %

WATER QUALITY

TEMPERATURE °C

SPEC. CONDUCTANCE

DISSOLVED OXYGEN

pH

TURBIDITY

WQ INSTRUMENT USED

WATER ODORS: [X] NORMAL/NONE [ ] PETROLEUM [ ] FISHY [ ] SEWAGE [ ] CHEMICAL [ ] OTHER

WATER SURFACE OILS: [X] SLICK [ ] GLOBS [ ] NONE [ ] SHEEN - Oily [ ] FLECKS [ ] OTHER

TURBIDITY (IF NOT MEASURED): [ ] CLEAR [ ] TURBID [X] STAINED [ ] SLIGHTLY TURBID [ ] OPAQUE [ ] OTHER

SEDIMENT/ SUBSTRATE

ODORS: [X] NORMAL [ ] SEWAGE [ ] PETROLEUM [ ] OTHER [ ] ANAEROBIC [ ] NONE [ ] CHEMICAL

DEPOSITS: [ ] SLUDGE [ ] PAPER FIBER [ ] RELICT SHELLS [ ] OTHER [ ] SAWDUST [ ] SAND

OILS: [X] ABSENT [ ] MODERATE [ ] SLIGHT [ ] PROFUSE

UNDERSIDES OF NON-EMBEDDED STONES BLACK IN COLOR? [ ] YES [X] NO

INORGANIC SUBSTRATE COMPONENTS (ADD TO 100%)			ORGANIC SUBSTRATE COMPONENTS (MAY ADD TO LESS THAN 100%)		
SUBSTRATE TYPE	DIAMETER	% COMPOSITION IN SAMPLING REACH	SUBSTRATE TYPE	CHARACTERISTIC	% COMPOSITION IN SAMPLING REACH
BEDROCK	-	-	DETRITUS	STICKS, WOOD, COARSE PLANT MATERIALS (CPOM)	75
BOULDER	256 MM (10"+)	-			
COBBLE	64 – 256 MM (2.5 – 10")	-	MUCK - MUD	BLACK, VERY FINE ORGANIC (FPOM)	—
GRAVEL	2 – 64 MM (0.1 – 2.5")	-			
SAND	0.06 -0 2 MM (GRITTY)	33			
SILT	0.004 – 0.06 MM	33	MARL	GREY, SHELL FRAGMENTS	—
CLAY	<0.004 MM (SLICK)	33			

S-JHS-31

Riverine Assessment Form

Pennsylvania Riverine Condition Level 1 Rapid Assessment Version 1.0

For use in wadeable channels classified as intermittent or perennial

Project #	Project Name	Locality	HUC	Date	AA #	AA length
AHJ	PTC ALLEGHENY TURNPIKE			05.24.12	S-JHS-31	

Name(s) of Evaluator(s)	Steam Name and Information
SRC, DLM	S-JHS-31 UNT TO STONEY CREEK RENK

1. RIPARIAN VEGETATION: Assess the floodplain along the entire SAR (Visual estimates of areal covergae from aerial photos with field verified acceptable).

	Conditional Category								NOTES>>
	Optimal	Suboptimal		Marginal		Poor			
Riparian Vegetation (Floodplain)	Tree stratum (dbh > 3 inches) present, with > 60% tree canopy cover. Wetlands and stream channels located within the riparian areas.	High Suboptimal: Riparian areas with tree stratum (dbh > 3 inches) present, with 30% to 60% tree canopy cover and containing both herbaceous and shrub layers or a non-maintained understory.	Low Suboptimal: Riparian areas with tree stratum (dbh > 3 inches) present, with 30% to 60% tree canopy cover and a maintained understory. Recent cutover (dense vegetation).	High Marginal: Non-maintained, dense herbaceous vegetation with either a shrub layer or a tree layer (dbh > 3 inches) present, with <30% tree canopy cover.	Low Marginal: Non-maintained, dense herbaceous vegetation, riparian areas lacking shrub and tree stratum, hay production, ponds, open water. If present, tree stratum (dbh >3 inches) present, with <30% tree canopy cover with maintained understory.	High Poor: Lawns, mowed, and maintained areas, nurseries; no-till cropland; actively grazed pasture, sparsely vegetated non-maintained area, recently seeded and stabilized, or other comparable condition.	Low Poor: Impervious surfaces, mine spoil lands, denuded surfaces, row crops, active feed lots, trails, or other comparable conditions.		
		High	Low	High	Low	High	Low		
Scores	20 19 18 17 16	15 14 13	12 11	10 9 8	7 6	5 4 3	2 1		

1. Identify Condition Category areas along the floodplain using the descriptors above.
2. Estimate the % area within each condition category. Calculators are provided for you below.
3. Enter the % Riparian Area and Score for each category in the blocks below.

Ensure the sums of % Riparian Blocks equal 100

Right Side	% Riparian Area>	1.00							100 0%		
	Score >	14							14		
										CI= Sum (Rt and Lt sub-Indexes)/2	
Left Side	% Riparian Area>	1.00							100 0%	Rt Sub-Index> 0.70 0.00	CI
	Score >	14							14	Lt Sub-Index> 0.70 0.00	0.00

0.70

2. RIPARIAN ZONE OF INFLUENCE: Assess land cover along both sides, 100 foot from edge of floodplain into the upland along the entire SAR (Visual estimates of areal covergae from aerial photos with field verified acceptable).

	Conditional Category								NOTES>>
	Optimal	Suboptimal		Marginal		Poor			
Riparian ZOI	Tree stratum (dbh > 3 inches) present, with > 60% tree canopy cover. Wetlands and stream channels located within the riparian areas.	High Suboptimal: Riparian areas with tree stratum (dbh > 3 inches) present, with 30% to 60% tree canopy cover and containing both herbaceous and shrub layers or a non-maintained understory.	Low Suboptimal: Riparian areas with tree stratum (dbh > 3 inches) present, with 30% to 60% tree canopy cover and a maintained understory. Recent cutover (dense vegetation).	High Marginal: Non-maintained, dense herbaceous vegetation with either a shrub layer or a tree layer (dbh > 3 inches) present, with <30% tree canopy cover.	Low Marginal: Non-maintained, dense herbaceous vegetation, riparian areas lacking shrub and tree stratum, hay production, ponds, open water. If present, tree stratum (dbh >3 inches) present, with <30% tree canopy cover with maintained understory.	High Poor: Lawns, mowed, and maintained areas, nurseries; no-till cropland; actively grazed pasture, sparsely vegetated non-maintained area, recently seeded and stabilized, or other comparable condition.	Low Poor: Impervious surfaces, mine spoil lands, denuded surfaces, row crops, active feed lots, trails, or other comparable conditions.		
		High	Low	High	Low	High	Low		
Score	20 19 18 17 16	15 14 13	12 11	10 9 8	7 6	5 4 3	2 1		

1. Identify Condition Category areas along each side of the Riparian ZOI using the descriptors above.
2. Estimate the % area within each condition category. Calculators are provided for you below.
3. Enter the % Riparian ZOI Area and Score for each condition category observed in the blocks below.

Ensure the sums of % Riparian ZOI Blocks equal 100

Right Side	% Riparian Area>	1.00							100 0%		
	Score >	14							14		
										CI= Sum (Rt and Lt sub-Indexes)/2	
Left Side	% Riparian Area>	1.00							100 0%	Rt Sub-Index> 0.70 0.00	CI
	Score >	14							14	Lt Sub-Index> 0.70 0.00	0.00

0.70

Comments:

PRIMARY ZOI IS UPLAND, DECIDUOUS FOREST.

RIPARIAN ECOTONE CONDITION INDEX		RECI
NOTE: The CIs and RECI should be rounded to 2 decimal places.	THE RIPARIAN ECOTONE CONDITION INDEX (RECI) RECI = (Sum of CI's)/2	0.00

0.70

S-JHS-31 overview, facing upstream.

S-JHS-31 overview, facing downstream.

STREAM S-JHS-32

PHYSICAL CHARACTERIZATION/WATER QUALITY FIELD DATA SHEET

STREAM NAME	S JHS 28 32			CLIENT	PTC
STREAM CLASS	EPHEMERAL			PROJECT	Allegheny Tunnel
INVESTIGATORS	SRC DLW	DATE	05.24.12 MM/DD/YR	LOCATION	Somerset County, PA
		TIME	12:55 24 HOUR (I.E. 16:45)		
LATITUDE		LONGITUDE		RIVER BASIN	STONYCREEK RIVER
STATION #		RIVERMILE		STORET #	

WEATHER CONDITIONS

NOW		PAST 24 HOURS
[ ] 1	STORM (HEAVY RAIN)	[ ] 1
[ ] 2	RAIN (STEADY RAIN)	[ ] 2
[ ] 3	SHOWERS (INTERMITTENT)	[ ] 3
[X] 4	% CLOUD COVER 79	[X] 4
[ ] 5	CLEAR/SUNNY	[ ] 5

HAS THERE BEEN A HEAVY RAIN IN THE LAST 7 DAYS? [X] YES [ ] NO

AIR TEMPERATURE 70 °F

OTHER

SITE LOCATION MAP

PROVIDE A PLAN VIEW SKETCH WITH A NORTH ARROW (INDICATE DIRECTIONS OF PHOTOGRAPHS)

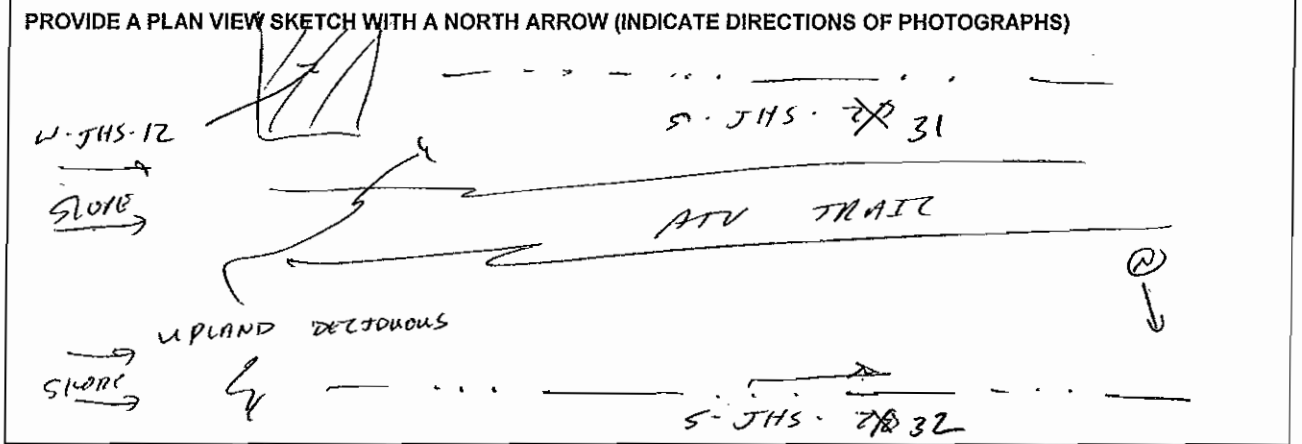

FOR LINEAR PROJECTS, PROVIDE DIMENSIONS AT THE CENTERLINE OF THE STREAM CROSSING.

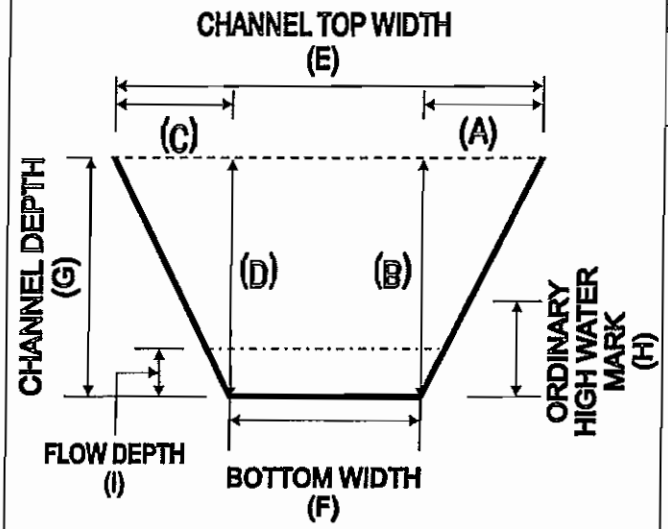

RIGHT BANK (FACE DOWNSTREAM)	HORIZONTAL (A)	1.0	FT.
	VERTICAL (B)	1.0	FT.
LEFT BANK (FACE DOWNSTREAM)	HORIZONTAL (C)	1.0	FT.
	VERTICAL (D)	1.0	FT.
CHANNEL DIMENSIONS	TOP WIDTH (E)	4.0	FT.
	BOTTOM WIDTH (F)	2.0	FT.
	OVERALL DEPTH (G)	1.0	FT.
	ORDINARY HIGH WATER MARK (H)	0.5	FT.
	FLOW DEPTH (I)	Ø	FT.
	APPROX. SURFACE VELOCITY	Ø	FT./SEC

STREAM CHARACTERIZATION

STREAM SUBSYSTEM
- [ ] PERENNIAL
- [X] EPHEMERAL
- [ ] INTERMITTENT
- [ ] TIDAL

STREAM TYPE
- [ ] COLD WATER
- [X] WARM WATER

CATCHMENT AREA ____ SQ. MI.

STREAM ORIGIN
- [ ] GLACIAL
- [ ] NON-GLACIAL MONTANE
- [ ] SWAMP AND BOG
- [ ] SPRING FED
- [ ] MIXTURE OF ORIGINS
- [X] OTHER STORMWATER

STREAM ID: S·JHS·28 32

PHYSICAL CHARACTERIZATION/WATER QUALITY FIELD DATA SHEET

WATERSHED FEATURES

PREDOMINANT SURROUNDING LANDUSE: [X] FOREST [ ] FIELD/PASTURE [ ] AGRICULTURAL [ ] RESIDENTIAL [ ] COMMERCIAL [ ] INDUSTRIAL [ ] OTHER

LOCAL WATERSHED NPS POLLUTION: [X] NO EVIDENCE [ ] SOME POTENTIAL SOURCES [ ] OBVIOUS SOURCES

LOCAL WATERSHED EROSION: [X] NONE [ ] MODERATE [ ] HEAVY

RIPARIAN VEG. (18 M. BUFFER)

INDICATE THE DOMINANT TYPE AND RECORD THE DOMINANT SPECIES PRESENT: [ ] TREES [ ] SHRUBS [ ] GRASSES [X] HERBACEOUS

DOMINANT SPECIES PRESENT? SUGAR MAPLE, ITALY SCENTED FERN

INSTREAM FEATURES

STUDY LENGTH	~100	FT.
STREAM WIDTH	4.0	FT.
STUDY REACH AREA	~	AC.
EST. DRAINAGE AREA	~	SQ. MI.
MACROINVERTEBRATES PRESENT?	[ ] YES [X] NO	
TAXA PRESENT	—	

CANOPY COVER: [ ] OPEN [ ] PARTLY OPEN [ ] PARTLY SHADED [X] SHADED

PROPERTIES OF REACH, STREAM MORPHOLOGY TYPES: [ ] RIFFLE % [ ] RUN %; [ ] POOL %

CHANNELIZED [ ] YES [ ] NO

DAM PRESENT [ ] YES [ ] NO

LARGE WOODY DEBRIS

LWD ~ FT.^{2}

DENSITY OF LWD ~ FT.^{2}/MI.^{2}

AQUATIC VEGETATON

INDICATE THE DOMINANT TYPE AND RECORD THE DOMINANT SPECIES PRESENT: [ ] ROOTED EMERGENT [ ] ROOTED SUBMERGENT [ ] ROOTED FLOATING [ ] FLOATING ALGAE [ ] ATTACHED ALGAE [ ] FREE FLOATING

DOMINANT SPECIES PRESENT

PORTION OF THE REACH WITH AQUATIC VEGETATION %

WATER QUALITY

TEMPERATURE		°C
SPEC. CONDUCTANCE		
DISSOLVED OXYGEN		
pH		
TURBIDITY		
WQ INSTRUMENT USED		

WATER ODORS: [ ] NORMAL/NONE [ ] SEWAGE [ ] PETROLEUM [ ] CHEMICAL [ ] FISHY [ ] OTHER

WATER SURFACE OILS: [ ] SLICK [ ] SHEEN - Oily [ ] GLOBS [ ] FLECKS [ ] NONE [ ] OTHER

TURBIDITY (IF NOT MEASURED): [ ] CLEAR [ ] SLIGHTLY TURBID [ ] TURBID [ ] OPAQUE [ ] STAINED [ ] OTHER

SEDIMENT/ SUBSTRATE

ODORS: [X] NORMAL [ ] SEWAGE [ ] PETROLEUM [ ] OTHER [ ] ANAEROBIC [ ] NONE [ ] CHEMICAL

DEPOSITS: [ ] SLUDGE [ ] SAWDUST [ ] PAPER FIBER [ ] SAND [ ] RELICT SHELLS [ ] OTHER

OILS: [X] ABSENT [ ] MODERATE [ ] SLIGHT [ ] PROFUSE

UNDERSIDES OF NON-EMBEDDED STONES BLACK IN COLOR? [ ] YES [X] NO

INORGANIC SUBSTRATE COMPONENTS (ADD TO 100%)			ORGANIC SUBSTRATE COMPONENTS (MAY ADD TO LESS THAN 100%)		
SUBSTRATE TYPE	DIAMETER	% COMPOSITION IN SAMPLING REACH	SUBSTRATE TYPE	CHARACTERISTIC	% COMPOSITION IN SAMPLING REACH
BEDROCK	-	—	DETRITUS	STICKS, WOOD, COARSE PLANT MATERIALS (CPOM)	60
BOULDER	256 MM (10"+)	25			
COBBLE	64 – 256 MM (2.5 – 10")	25	MUCK - MUD	BLACK, VERY FINE ORGANIC (FPOM)	—
GRAVEL	2 – 64 MM (0.1 – 2.5")	—			
SAND	0.06 -0 2 MM (GRITTY)	40			
SILT	0.004 – 0.06 MM	10	MARL	GREY, SHELL FRAGMENTS	—
CLAY	<0.004 MM (SLICK)	—			

S-JHS-32

Riverine Assessment Form

Pennsylvania Riverine Condition Level 1 Rapid Assessment Version 1.0

For use in wadeable channels classified as intermittent or perennial

Project #	Project Name	Locality	HUC	Date	AA #	AA length
A115	PTC ALLEGHENY TUNNEL			05-24-12	S-JHS-32	

Name(s) of Evaluator(s)	Steam Name and Information
SRL, DLM	S-JHS-32 UNT TO SPONEY BROOK AIRGL

1. RIPARIAN VEGETATION: Assess the floodplain along the entire SAR (Visual estimates of areal covergae from aerial photos with field verified acceptable).

	Conditional Category							NOTES>>
	Optimal	Suboptimal		Marginal		Poor		
Riparian Vegetation (Floodplain)	Tree stratum (dbh > 3 inches) present, with > 60% tree canopy cover. Wetlands and stream channels located within the riparian areas	**High Suboptimal:** Riparian areas with tree stratum (dbh > 3 inches) present, with 30% to 60% tree canopy cover and containing both herbaceous and shrub layers or a non-maintained understory.	**Low Suboptimal:** Riparian areas with tree stratum (dbh > 3 inches) present, with 30% to 60% tree canopy cover and a maintained understory. Recent cutover (dense vegetation).	**High Marginal:** Non-maintained, dense herbaceous vegetation with either a shrub layer or a tree layer (dbh > 3 inches) present, with <30% tree canopy cover.	**Low Marginal:** Non-maintained, dense herbaceous vegetation, riparian areas lacking shrub and tree stratum, hay production, ponds, open water. If present, tree stratum (dbh >3 inches) present, with <30% tree canopy cover with maintained understory.	**High Poor:** Lawns, mowed, and maintained areas, nurseries; no-till cropland; actively grazed pasture, sparsely vegetated non-maintained area, recently seeded and stabilized, or other comparable condition.	**Low Poor:** Impervious surfaces, mine spoil lands, denuded surfaces, row crops, active feed lots, trails, or other comparable conditions.	
		High	Low	High	Low	High	Low	
Scores	20 19 18 17 16	15 14 13	12 11	10 9 8	7 6	5 4 3	2 1	

1. Identify Condition Category areas along the floodplain using the descriptors above.
2. Estimate the % area within each condition category. Calculators are provided for you below.
3. Enter the % Riparian Area and Score for each category in the blocks below.

Ensure the sums of % Riparian Blocks equal 100

Right Side	% Riparian Area>	1.00						100 0%		
	Score >	14						14		
									CI= Sum (Rt and Lt sub-Indexes)/2	
Left Side	% Riparian Area>	1.00						100 0%	Rt Sub-Index> 0.70 ~~0.00~~	CI
	Score >	14						14	Lt Sub-Index> 0.70 ~~0.00~~	~~0.00~~ 0.70

2. RIPARIAN ZONE OF INFLUENCE: Assess land cover along both sides, 100 foot from edge of floodplain into the upland along the entire SAR (Visual estimates of areal covergae from aerial photos with field verified acceptable).

	Conditional Category							NOTES>>
	Optimal	Suboptimal		Marginal		Poor		
Riparian ZOI	Tree stratum (dbh > 3 inches) present, with > 60% tree canopy cover. Wetlands and stream channels located within the riparian areas.	**High Suboptimal:** Riparian areas with tree stratum (dbh > 3 inches) present, with 30% to 60% tree canopy cover and containing both herbaceous and shrub layers or a non-maintained understory.	**Low Suboptimal:** Riparian areas with tree stratum (dbh > 3 inches) present, with 30% to 60% tree canopy cover and a maintained understory. Recent cutover (dense vegetation).	**High Marginal:** Non-maintained, dense herbaceous vegetation with either a shrub layer or a tree layer (dbh > 3 inches) present, with <30% tree canopy cover.	**Low Marginal:** Non-maintained, dense herbaceous vegetation, riparian areas lacking shrub and tree stratum, hay production, ponds, open water. If present, tree stratum (dbh >3 inches) present, with <30% tree canopy cover with maintained understory	**High Poor:** Lawns, mowed, and maintained areas, nurseries; no-till cropland; actively grazed pasture, sparsely vegetated non-maintained area, recently seeded and stabilized, or other comparable condition.	**Low Poor:** Impervious surfaces, mine spoil lands, denuded surfaces, row crops, active feed lots, trails, or other comparable conditions.	
		High	Low	High	Low	High	Low	
Score	20 19 18 17 16	15 14 13	12 11	10 9 8	7 6	5 4 3	2 1	

1. Identify Condition Category areas along each side of the Riparian ZOI using the descriptors above.
2. Estimate the % area within each condition category. Calculators are provided for you below.
3. Enter the % Riparian ZOI Area and Score for each condition category observed in the blocks below.

Ensure the sums of % Riparian ZOI Blocks equal 100

Right Side	% Riparian Area>	1.00						100 0%		
	Score >	14						14		
									CI= Sum (Rt and Lt sub-Indexes)/2	
Left Side	% Riparian Area>	1.00						100 0%	Rt Sub-Index> 0.70 ~~0.00~~	CI
	Score >	14						14	Lt Sub-Index> 0.70 ~~0.00~~	~~0.00~~ 0.70

Comments:

ZOI CONSISTS OF UPLAND, DECIDUOUS FOREST.

RIPARIAN ECOTONE CONDITION INDEX		RECI
NOTE: **The CIs and RECI should be rounded to 2 decimal places.**	**THE RIPARIAN ECOTONE CONDITION INDEX (RECI) RECI = (Sum of CI's)/2**	~~0.00~~ 0.70

S-JHS-32 overview, facing upstream.

S-JHS-32 overview, facing downstream.

STREAM S-SRC-01

PHYSICAL CHARACTERIZATION/WATER QUALITY FIELD DATA SHEET

STREAM NAME	S-SRC-01 YL/BR				CLIENT	PTC
STREAM CLASS	PERENNIAL				PROJECT	Allegheny Tunnel
INVESTIGATORS	SRC KLE	DATE	05.09.12	MM/DD/YR	LOCATION	Somerset County, PA
		TIME	10:35	24 HOUR (I.E. 16:45)		
LATITUDE	-	LONGITUDE		-	RIVER BASIN	STONYCREEK RIVER
STATION #	-	RIVERMILE		-	STORET #	-

WEATHER CONDITIONS	NOW			PAST 24 HOURS
	☐	STORM (HEAVY RAIN)		☐
	☐	RAIN (STEADY RAIN)		☒
	☐	SHOWERS (INTERMITTENT)		☐
	☒	100 % CLOUD COVER	100	☒
	☐	CLEAR/SUNNY		☐

HAS THERE BEEN A HEAVY RAIN IN THE LAST 7 DAYS? ☒ YES ☐ NO

AIR TEMPERATURE 65 °F

OTHER

SITE LOCATION MAP

PROVIDE A PLAN VIEW SKETCH WITH A NORTH ARROW (INDICATE DIRECTIONS OF PHOTOGRAPHS)

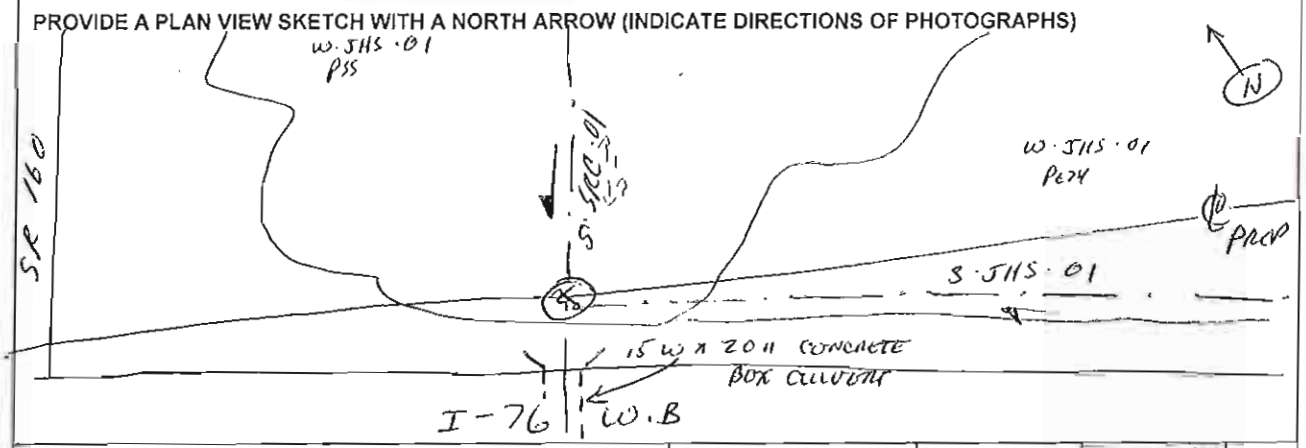

FOR LINEAR PROJECTS, PROVIDE DIMENSIONS AT THE CENTERLINE OF THE STREAM CROSSING.

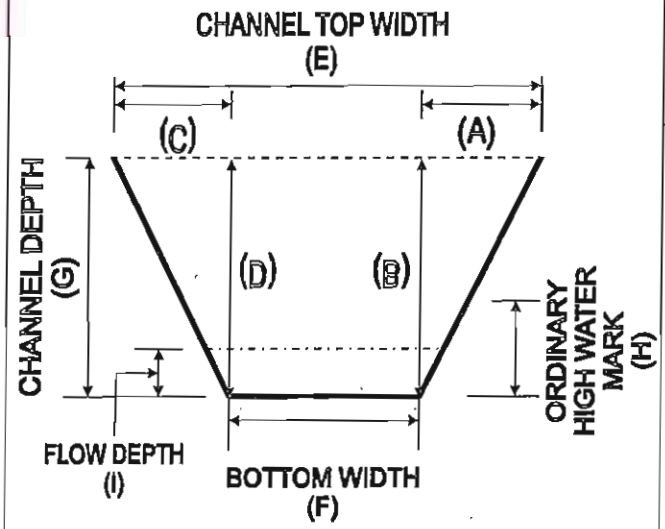

RIGHT BANK (FACE DOWNSTREAM)	HORIZONTAL (A)	0.5	FT.
	VERTICAL (B)	4.0	FT.
LEFT BANK (FACE DOWNSTREAM)	HORIZONTAL (C)	0.5	FT.
	VERTICAL (D)	4.0	FT.
CHANNEL DIMENSIONS	TOP WIDTH (E)	6.0	FT.
	BOTTOM WIDTH (F)	4.5	FT.
	OVERALL DEPTH (G)	4.0	FT.
	ORDINARY HIGH WATER MARK (H)	3.0	FT.
	FLOW DEPTH (I)	3.0	FT.
	APPROX. SURFACE VELOCITY	2.5	FT./SEC

STREAM CHARACTERIZATION

STREAM SUBSYSTEM
☒ PERENNIAL ☐ EPHEMERAL ☐ INTERMITTENT ☐ TIDAL

STREAM TYPE
☐ COLD WATER ☒ WARM WATER
CATCHMENT AREA SQ. MI.

STREAM ORIGIN
☐ GLACIAL
☐ NON-GLACIAL MONTANE
☐ SWAMP AND BOG
☒ SPRING FED
☒ MIXTURE OF ORIGINS
☒ OTHER STORMWATER

STREAM ID: S-SRC-01 4L/OR

PHYSICAL CHARACTERIZATION/WATER QUALITY FIELD DATA SHEET

WATERSHED FEATURES

PREDOMINANT SURROUNDING LANDUSE
- [ ] FOREST
- [x] FIELD/PASTURE
- [x] AGRICULTURAL
- [ ] RESIDENTIAL
- [ ] COMMERCIAL
- [ ] INDUSTRIAL
- [x] OTHER: TRANSPORTATION

LOCAL WATERSHED NPS POLLUTION
- [ ] NO EVIDENCE
- [x] SOME POTENTIAL SOURCES
- [ ] OBVIOUS SOURCES

LOCAL WATERSHED EROSION
- [ ] NONE
- [x] MODERATE
- [ ] HEAVY

RIPARIAN VEG. (18 M. BUFFER)

INDICATE THE DOMINANT TYPE AND RECORD THE DOMINANT SPECIES PRESENT
- [ ] TREES
- [x] SHRUBS
- [ ] GRASSES
- [x] HERBACEOUS

DOMINANT SPECIES PRESENT? ARROW WOOD, MEADOWSWEET, TUSSOCKS SEDGE

INSTREAM FEATURES

STUDY LENGTH	~500	FT.
STREAM WIDTH	6.0	FT.
STUDY REACH AREA	–	AC.
EST. DRAINAGE AREA	–	SQ. MI.
MACROINVERTEBRATES PRESENT?	[x] YES [ ] NO	
TAXA PRESENT	MIDGES, CADDIS, & FISH	

CANOPY COVER
- [ ] OPEN
- [ ] PARTLY OPEN
- [x] PARTLY SHADED
- [ ] SHADED

PROPERTIES OF REACH, STREAM MORPHOLOGY TYPES

[x] RIFFLE	40 %	[ ] RUN	%
[x] POOL	60 %		

- CHANNELIZED: [ ] YES [x] NO
- DAM PRESENT: [ ] YES [x] NO

LARGE WOODY DEBRIS

LWD	–	FT.²
DENSITY OF LWD	–	FT.²/MI.²

AQUATIC VEGETATON N/A

INDICATE THE DOMINANT TYPE AND RECORD THE DOMINANT SPECIES PRESENT
- [ ] ROOTED EMERGENT
- [ ] FLOATING ALGAE
- [ ] ROOTED SUBMERGENT
- [ ] ATTACHED ALGAE
- [ ] ROOTED FLOATING
- [ ] FREE FLOATING

DOMINANT SPECIES PRESENT

PORTION OF THE REACH WITH AQUATIC VEGETATION %

WATER QUALITY

TEMPERATURE		°C
SPEC. CONDUCTANCE		
DISSOLVED OXYGEN		
pH		
TURBIDITY		
WQ INSTRUMENT USED		

WATER ODORS
- [x] NORMAL/NONE
- [ ] PETROLEUM
- [ ] FISHY
- [ ] SEWAGE
- [ ] CHEMICAL
- [ ] OTHER

WATER SURFACE OILS
- [ ] SLICK
- [ ] GLOBS
- [x] NONE
- [ ] SHEEN - Oily
- [ ] FLECKS
- [ ] OTHER

TURBIDITY (IF NOT MEASURED)
- [ ] CLEAR
- [x] TURBID
- [ ] STAINED
- [ ] SLIGHTLY TURBID
- [ ] OPAQUE
- [x] OTHER: RUNOFF EVENT WITH TRAFFIC

SEDIMENT/ SUBSTRATE

ODORS
- [ ] NORMAL
- [ ] SEWAGE
- [ ] PETROLEUM
- [ ] OTHER
- [x] ANAEROBIC
- [ ] NONE
- [ ] CHEMICAL

DEPOSITS
- [ ] SLUDGE
- [ ] PAPER FIBER
- [ ] RELICT SHELLS
- [ ] OTHER
- [ ] SAWDUST
- [ ] SAND

OILS
- [x] ABSENT
- [ ] MODERATE
- [ ] SLIGHT
- [ ] PROFUSE

UNDERSIDES OF NON-EMBEDDED STONES BLACK IN COLOR?
- [ ] YES
- [x] NO

INORGANIC SUBSTRATE COMPONENTS (ADD TO 100%)			ORGANIC SUBSTRATE COMPONENTS (MAY ADD TO LESS THAN 100%)		
SUBSTRATE TYPE	DIAMETER	% COMPOSITION IN SAMPLING REACH	SUBSTRATE TYPE	CHARACTERISTIC	% COMPOSITION IN SAMPLING REACH
BEDROCK	-	–	DETRITUS	STICKS, WOOD, COARSE PLANT MATERIALS (CPOM)	–
BOULDER	256 MM (10"+)	–			
COBBLE	64 – 256 MM (2.5 – 10")	5	MUCK - MUD	BLACK, VERY FINE ORGANIC (FPOM)	–
GRAVEL	2 – 64 MM (0.1 – 2.5")	20			
SAND	0.06 -0 2 MM (GRITTY)	–			
SILT	0.004 – 0.06 MM	75	MARL	GREY, SHELL FRAGMENTS	–
CLAY	<0.004 MM (SLICK)	–			

S·SRC·01

Riverine Assessment Form

Pennsylvania Riverine Condition Level 1 Rapid Assessment Version 1.0

For use in wadeable channels classified as intermittent or perennial

Project #	Project Name	Locality	HUC	Date	AA #	AA length
A115	PTC ALLEGHENY TUNNEL			05.09.12	S·SRC·01	

Name(s) of Evaluator(s)	Steam Name and Information
SRC, KLE	S·SRC·01 UNT TO STONEY CREEK RIVER

1. RIPARIAN VEGETATION: Assess the floodplain along the entire SAR (Visual estimates of areal covergae from aerial photos with field verified acceptable).

Conditional Category	Optimal	Suboptimal		Marginal		Poor	
Riparian Vegetation (Floodplain)	Tree stratum (dbh > 3 inches) present, with > 60% tree canopy cover. Wetlands and stream channels located within the riparian areas.	**High Suboptimal:** Riparian areas with tree stratum (dbh > 3 inches) present, with 30% to 60% tree canopy cover and containing both herbaceous and shrub layers or a non-maintained understory.	**Low Suboptimal:** Riparian areas with tree stratum (dbh > 3 inches) present, with 30% to 60% tree canopy cover and a maintained understory. Recent cutover (dense vegetation).	**High Marginal:** Non-maintained, dense herbaceous vegetation with either a shrub layer or a tree layer (dbh > 3 inches) present, with <30% tree canopy cover.	**Low Marginal:** Non-maintained, dense herbaceous vegetation, riparian areas lacking shrub and tree stratum, hay production, ponds, open water. If present, tree stratum (dbh >3 inches) present, with <30% tree canopy cover with maintained understory.	**High Poor:** Lawns, mowed, and maintained areas, nurseries; no-till cropland; actively grazed pasture, sparsely vegetated non-maintained area, recently seeded and stabilized, or other comparable condition.	**Low Poor:** Impervious surfaces, mine spoil lands, denuded surfaces, row crops, active feed lots, trails, or other comparable conditions.
		High	Low	High	Low	High	Low
Scores	20 19 18 17 16	15 14 13	12 11	10 9 8	7 6	5 4 3	2 1

NOTES>>

1. Identify Condition Category areas along the floodplain using the descriptors above.
2. Estimate the % area within each condition category. Calculators are provided for you below.
3. Enter the % Riparian Area and Score for each category in the blocks below.

Ensure the sums of % Riparian Blocks equal 100

Right Side	% Riparian Area>	0.60	0.40					100.00%	
	Score >	9	7					8.2	
									CI= Sum (Rt and Lt sub-Indexes)/2
Left Side	% Riparian Area>	0.60	0.40					100.00%	Rt Sub-Index> 0.37 0.00 / CI
	Score >	8	6					7.2	Lt Sub-Index> 0.36 0.00 / 0.00

0.39

2. RIPARIAN ZONE OF INFLUENCE: Assess land cover along both sides, 100 foot from edge of floodplain into the upland along the entire SAR (Visual estimates of areal covergae from aerial photos with field verified acceptable).

Conditional Category	Optimal	Suboptimal		Marginal		Poor	
Riparian ZOI	Tree stratum (dbh > 3 inches) present, with > 60% tree canopy cover. Wetlands and stream channels located within the riparian areas.	**High Suboptimal:** Riparian areas with tree stratum (dbh > 3 inches) present, with 30% to 60% tree canopy cover and containing both herbaceous and shrub layers or a non-maintained understory.	**Low Suboptimal:** Riparian areas with tree stratum (dbh > 3 inches) present, with 30% to 60% tree canopy cover and a maintained understory. Recent cutover (dense vegetation).	**High Marginal:** Non-maintained, dense herbaceous vegetation with either a shrub layer or a tree layer (dbh > 3 inches) present, with <30% tree canopy cover.	**Low Marginal:** Non-maintained, dense herbaceous vegetation, riparian areas lacking shrub and tree stratum, hay production, ponds, open water. If present, tree stratum (dbh >3 inches) present, with <30% tree canopy cover with maintained understory.	**High Poor:** Lawns, mowed, and maintained areas, nurseries; no-till cropland; actively grazed pasture, sparsely vegetated non-maintained area, recently seeded and stabilized, or other comparable condition.	**Low Poor:** Impervious surfaces, mine spoil lands, denuded surfaces, row crops, active feed lots, trails, or other comparable conditions.
		High	Low	High	Low	High	Low
Score	20 19 18 17 16	15 14 13	12 11	10 9 8	7 6	5 4 3	2 1

NOTES>>

TRANSPORT., AG. GRAZING, FILL AREA

1. Identify Condition Category areas along each side of the Riparian ZOI using the descriptors above.
2. Estimate the % area within each condition category. Calculators are provided for you below.
3. Enter the % Riparian ZOI Area and Score for each condition category observed in the blocks below.

Ensure the sums of % Riparian ZOI Blocks equal 100

Right Side	% Riparian Area>	0.70	0.30					100.00%	
	Score >	9	5					7.80	
									CI= Sum (Rt and Lt sub-Indexes)/2
Left Side	% Riparian Area>	0.60	0.40					100.00%	Rt Sub-Index> 0.37 0.00 / CI
	Score >	9	7					8.2	Lt Sub-Index> 0.41 0.00 / 0.00

0.40

Comments:

RIPARIAN ECOTONE CONDITION INDEX		RECI
NOTE: The CIs and RECI should be rounded to 2 decimal places.	THE RIPARIAN ECOTONE CONDITION INDEX (RECI) RECI = (Sum of CI's)/2	0.00

0.40

S-SRC-01 overview, facing upstream.

S-SRC-01 overview, facing downstream.

STREAM S-SRC-02

PHYSICAL CHARACTERIZATION/WATER QUALITY FIELD DATA SHEET

STREAM NAME	S-SAC-OQ YL/BR			CLIENT	PTC
STREAM CLASS	PERENNIAL			PROJECT	Allegheny Tunnel
INVESTIGATORS	SAC KLE	DATE	05.09.12 MM/DD/YR	LOCATION	Somerset County, PA
		TIME	14:35 24 HOUR (I.E. 16:45)		
LATITUDE	—	LONGITUDE	—	RIVER BASIN	STONY CREEK RIVER
STATION #	-	RIVERMILE	-	STORET #	-

WEATHER CONDITIONS	NOW			PAST 24 HOURS
	☐	STORM (HEAVY RAIN)		☐
	☐	RAIN (STEADY RAIN)		☒
	☒	SHOWERS (INTERMITTENT)		☐
	☒	100 % CLOUD COVER	100	☒
	☐	CLEAR/SUNNY		☐

HAS THERE BEEN A HEAVY RAIN IN THE LAST 7 DAYS? ☒ YES ☐ NO

AIR TEMPERATURE 65 °F

OTHER

SITE LOCATION MAP

PROVIDE A PLAN VIEW SKETCH WITH A NORTH ARROW (INDICATE DIRECTIONS OF PHOTOGRAPHS)

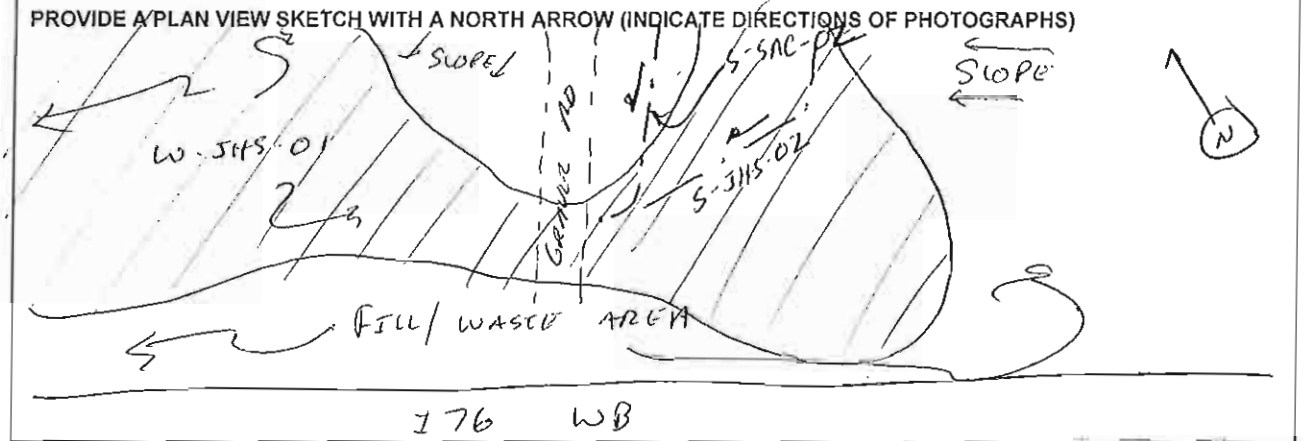

FOR LINEAR PROJECTS, PROVIDE DIMENSIONS AT THE CENTERLINE OF THE STREAM CROSSING.

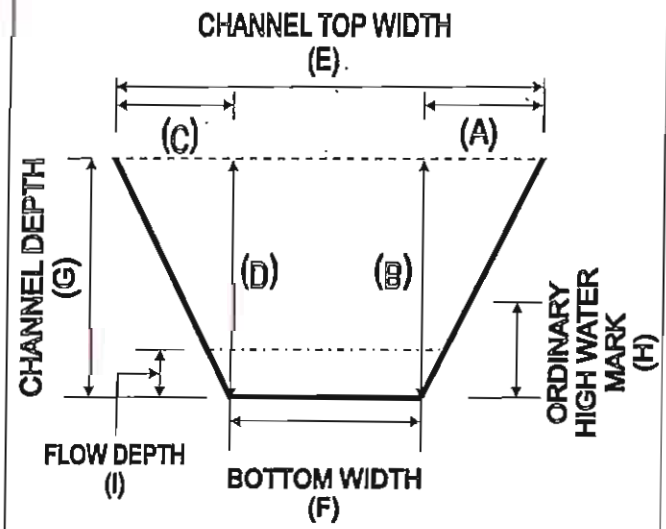

RIGHT BANK (FACE DOWNSTREAM)	HORIZONTAL (A)	3.0	FT.
	VERTICAL (B)	1.0	FT.
LEFT BANK (FACE DOWNSTREAM)	HORIZONTAL (C)	2.0	FT.
	VERTICAL (D)	1.0	FT.
CHANNEL DIMENSIONS	TOP WIDTH (E)	6.5	FT.
	BOTTOM WIDTH (F)	1.5	FT.
	OVERALL DEPTH (G)	1.0	FT.
	ORDINARY HIGH WATER MARK (H)	0.67	FT.
	FLOW DEPTH (I)	0.25	FT.
	APPROX. SURFACE VELOCITY	4.5	FT./SEC

STREAM CHARACTERIZATION

STREAM SUBSYSTEM
☒ PERENNIAL ☐ EPHEMERAL ☐ INTERMITTENT ☐ TIDAL

STREAM TYPE
☒ COLD WATER ☐ WARM WATER
CATCHMENT AREA SQ. MI.

STREAM ORIGIN
☐ GLACIAL
☐ NON-GLACIAL MONTANE
☐ SWAMP AND BOG
☒ SPRING FED
☒ MIXTURE OF ORIGINS
☐ OTHER

STREAM ID: S-SRC-02 YL/BR

PHYSICAL CHARACTERIZATION/WATER QUALITY FIELD DATA SHEET

WATERSHED FEATURES

PREDOMINANT SURROUNDING LANDUSE
- [x] FOREST
- [ ] FIELD/PASTURE
- [ ] AGRICULTURAL
- [ ] RESIDENTIAL
- [ ] COMMERCIAL
- [ ] INDUSTRIAL
- [ ] OTHER

LOCAL WATERSHED NPS POLLUTION
- [x] NO EVIDENCE
- [ ] SOME POTENTIAL SOURCES
- [ ] OBVIOUS SOURCES

LOCAL WATERSHED EROSION
- [ ] NONE
- [ ] MODERATE
- [ ] HEAVY

RIPARIAN VEG. (18 M. BUFFER)

INDICATE THE DOMINANT TYPE AND RECORD THE DOMINANT SPECIES PRESENT
- [x] TREES
- [ ] SHRUBS
- [ ] GRASSES
- [ ] HERBACEOUS

DOMINANT SPECIES PRESENT? RED MAPLE, SHAGBARK HICKORY, AM. IRONWOOD

INSTREAM FEATURES

STUDY LENGTH	~200	FT.
STREAM WIDTH	6.5	FT.
STUDY REACH AREA	–	AC.
EST. DRAINAGE AREA	–	SQ. MI.
MACROINVERTEBRATES PRESENT?	[x] YES [ ] NO	
TAXA PRESENT	CADDIS, MAYFLY	

CANOPY COVER: [ ] OPEN [ ] PARTLY OPEN [ ] PARTLY SHADED [ ] SHADED

PROPERTIES OF REACH, STREAM MORPHOLOGY TYPES
- [x] RIFFLE 80 %
- [x] POOL 20 %
- [ ] RUN %

CHANNELIZED [ ] YES [x] NO

DAM PRESENT [ ] YES [x] NO

LARGE WOODY DEBRIS

LWD	–	FT.^{2}
DENSITY OF LWD	–	FT.^{2}/MI.^{2}

AQUATIC VEGETATON

INDICATE THE DOMINANT TYPE AND RECORD THE DOMINANT SPECIES PRESENT
- [ ] ROOTED EMERGENT
- [ ] FLOATING ALGAE
- [x] ROOTED SUBMERGENT
- [ ] ATTACHED ALGAE
- [ ] ROOTED FLOATING
- [ ] FREE FLOATING

DOMINANT SPECIES PRESENT GREEN ALGAE/MOSS

PORTION OF THE REACH WITH AQUATIC VEGETATION 15 %

WATER QUALITY

TEMPERATURE		°C
SPEC. CONDUCTANCE		
DISSOLVED OXYGEN		
pH		
TURBIDITY		
WQ INSTRUMENT USED		

WATER ODORS
- [x] NORMAL/NONE
- [ ] PETROLEUM
- [ ] FISHY
- [ ] SEWAGE
- [ ] CHEMICAL
- [ ] OTHER

WATER SURFACE OILS
- [ ] SLICK
- [ ] GLOBS
- [x] NONE
- [ ] SHEEN - Oily
- [ ] FLECKS
- [ ] OTHER

TURBIDITY (IF NOT MEASURED)
- [ ] CLEAR
- [ ] TURBID
- [ ] STAINED
- [x] SLIGHTLY TURBID
- [ ] OPAQUE
- [x] OTHER RUNOFF 24 HR.

SEDIMENT/ SUBSTRATE

ODORS
- [x] NORMAL
- [ ] SEWAGE
- [ ] PETROLEUM
- [ ] OTHER
- [ ] ANAEROBIC
- [ ] NONE
- [ ] CHEMICAL

DEPOSITS
- [ ] SLUDGE
- [ ] PAPER FIBER
- [ ] RELICT SHELLS
- [ ] OTHER
- [ ] SAWDUST
- [ ] SAND

OILS
- [x] ABSENT
- [ ] MODERATE
- [ ] SLIGHT
- [ ] PROFUSE

UNDERSIDES OF NON-EMBEDDED STONES BLACK IN COLOR?
- [ ] YES
- [x] NO

INORGANIC SUBSTRATE COMPONENTS (ADD TO 100%)			ORGANIC SUBSTRATE COMPONENTS (MAY ADD TO LESS THAN 100%)		
SUBSTRATE TYPE	DIAMETER	% COMPOSITION IN SAMPLING REACH	SUBSTRATE TYPE	CHARACTERISTIC	% COMPOSITION IN SAMPLING REACH
BEDROCK	-	–	DETRITUS	STICKS, WOOD, COARSE PLANT MATERIALS (CPOM)	25
BOULDER	256 MM (10"+)	50			
COBBLE	64 – 256 MM (2.5 – 10")	10	MUCK - MUD	BLACK, VERY FINE ORGANIC (FPOM)	–
GRAVEL	2 – 64 MM (0.1 – 2.5")	–			
SAND	0.06 -0 2 MM (GRITTY)	–			
SILT	0.004 – 0.06 MM	20	MARL	GREY, SHELL FRAGMENTS	–
CLAY	<0.004 MM (SLICK)	–			

S·SRC·02

Riverine Assessment Form

Pennsylvania Riverine Condition Level 1 Rapid Assessment Version 1.0

For use in wadeable channels classified as intermittent or perennial

Project #	Project Name	Locality	HUC	Date	AA #	AA length
AHJ	PTC ALLEGHENY TUNNEL			05.09.12	S·SRC·02	

Name(s) of Evaluator(s)	Steam Name and Information
SRC, KLE	S·SRC·02 – UNT TO STONEY CREEK RIVER

1. RIPARIAN VEGETATION: Assess the floodplain along the entire SAR (Visual estimates of areal covergae from aerial photos with field verified acceptable).

	Conditional Category							NOTES>>
	Optimal	Suboptimal		Marginal		Poor		
Riparian Vegetation (Floodplain)	Tree stratum (dbh > 3 inches) present, with > 60% tree canopy cover. Wetlands and stream channels located within the riparian areas.	**High Suboptimal:** Riparian areas with tree stratum (dbh > 3 inches) present, with 30% to 60% tree canopy cover and containing both herbaceous and shrub layers or a non-maintained understory.	**Low Suboptimal:** Riparian areas with tree stratum (dbh > 3 inches) present, with 30% to 60% tree canopy cover and a maintained understory. Recent cutover (dense vegetation).	**High Marginal:** Non-maintained, dense herbaceous vegetation with either a shrub layer or a tree layer (dbh > 3 inches) present, with <30% tree canopy cover.	**Low Marginal:** Non-maintained, dense herbaceous vegetation, riparian areas lacking shrub and tree stratum, hay production, ponds, open water. If present, tree stratum (dbh >3 inches) present, with <30% tree canopy cover with maintained understory.	**High Poor:** Lawns, mowed, and maintained areas, nurseries; no-till cropland; actively grazed pasture, sparsely vegetated non-maintained area, recently seeded and stabilized, or other comparable condition.	**Low Poor:** Impervious surfaces, mine spoil lands, denuded surfaces, row crops, active feed lots, trails, or other comparable conditions.	
		High	Low	High	Low	High	Low	
Scores	20 19 18 17 16	15 14	13 12 11	10 9 8	7 6	5 4 3	2 1	

1. Identify Condition Category areas along the floodplain using the descriptors above.
2. Estimate the % area within each condition category. Calculators are provided for you below.
3. Enter the % Riparian Area and Score for each category in the blocks below.

Ensure the sums of % Riparian Blocks equal 100

Right Side	% Riparian Area>	1.00						100.00%		
	Score >	18						18		
									CI= Sum (Rt and Lt sub-Indexes)/2	
Left Side	% Riparian Area>	100						100.00%	Rt Sub-Index> 0.50 0.00	CI
	Score >	18						18	Lt Sub-Index> 0.50 0.00	0.00

0.90

2. RIPARIAN ZONE OF INFLUENCE: Assess land cover along both sides, 100 foot from edge of floodplain into the upland along the entire SAR (Visual estimates of areal covergae from aerial photos with field verified acceptable).

	Conditional Category							NOTES>>
	Optimal	Suboptimal		Marginal		Poor		
Riparian ZOI	Tree stratum (dbh > 3 inches) present, with > 60% tree canopy cover. Wetlands and stream channels located within the riparian areas.	**High Suboptimal:** Riparian areas with tree stratum (dbh > 3 inches) present, with 30% to 60% tree canopy cover and containing both herbaceous and shrub layers or a non-maintained understory.	**Low Suboptimal:** Riparian areas with tree stratum (dbh > 3 inches) present, with 30% to 60% tree canopy cover and a maintained understory. Recent cutover (dense vegetation).	**High Marginal:** Non-maintained, dense herbaceous vegetation with either a shrub layer or a tree layer (dbh > 3 inches) present, with <30% tree canopy cover.	**Low Marginal:** Non-maintained, dense herbaceous vegetation, riparian areas lacking shrub and tree stratum, hay production, ponds, open water. If present, tree stratum (dbh >3 inches) present, with <30% tree canopy cover with maintained understory.	**High Poor:** Lawns, mowed, and maintained areas, nurseries; no-till cropland, actively grazed pasture, sparsely vegetated non-maintained area, recently seeded and stabilized, or other comparable condition.	**Low Poor:** Impervious surfaces, mine spoil lands, denuded surfaces, row crops, active feed lots, trails, or other comparable conditions.	
		High	Low	High	Low	High	Low	
Score	20 19 18 17 16	15 14	13 12 11	10 9 8	7 6	5 4 3	2 1	

1. Identify Condition Category areas along each side of the Riparian ZOI using the descriptors above.
2. Estimate the % area within each condition category. Calculators are provided for you below.
3. Enter the % Riparian ZOI Area and Score for each condition category observed in the blocks below.

Ensure the sums of % Riparian ZOI Blocks equal 100

Right Side	% Riparian Area>	0.90	0.10					100.0%		
	Score >	18	5					16.7		
									CI= Sum (Rt and Lt sub-Indexes)/2	
Left Side	% Riparian Area>	1.00						100.0%	Rt Sub-Index> 0.50 0.00	CI
	Score >	19						19	Lt Sub-Index> 0.45 0.00	0.00

0.85

Comments:

UPLAND DECIDUOUS FOREST SURROUNDING CHANNEL.

RIPARIAN ECOTONE CONDITION INDEX		RECI
NOTE: **The CIs and RECI should be rounded to 2 decimal places.**	**THE RIPARIAN ECOTONE CONDITION INDEX (RECI) RECI = (Sum of CI's)/2**	0.00

0.90

S-SRC-02 overview, facing upstream.

S-SRC-02 overview, facing downstream.

STREAM S-SRC-03

PHYSICAL CHARACTERIZATION/WATER QUALITY FIELD DATA SHEET

STREAM NAME	S.SRC.03				CLIENT	PTC
STREAM CLASS	INTERMITTENT				PROJECT	Allegheny Tunnel
INVESTIGATORS	SRC KLE	DATE	05.10.12	MM/DD/YR	LOCATION	Somerset County, PA
		TIME	08:05	24 HOUR (I.E. 16:45)		
LATITUDE		LONGITUDE			RIVER BASIN	STONY CREEK RIVER
STATION #	-	RIVERMILE		-	STORET #	-

WEATHER CONDITIONS	NOW			PAST 24 HOURS
	☐	STORM (HEAVY RAIN)		☐
	☐	RAIN (STEADY RAIN)		☐
	☐	SHOWERS (INTERMITTENT)		☒
	☒	100 % CLOUD COVER	100	☒
	☐	CLEAR/SUNNY		☐

HAS THERE BEEN A HEAVY RAIN IN THE LAST 7 DAYS? ☒ YES ☐ NO

AIR TEMPERATURE 45 °F

OTHER

SITE LOCATION MAP

PROVIDE A PLAN VIEW SKETCH WITH A NORTH ARROW (INDICATE DIRECTIONS OF PHOTOGRAPHS)

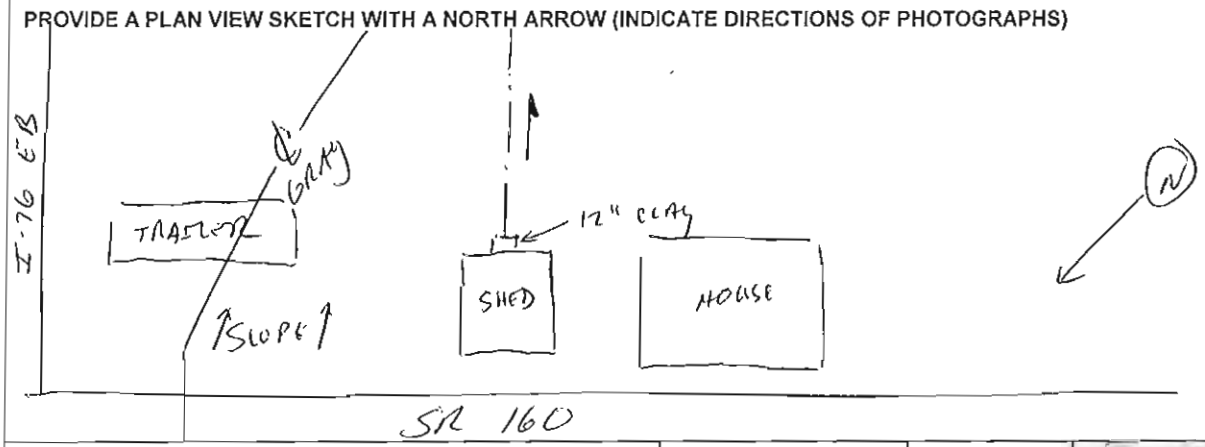

FOR LINEAR PROJECTS, PROVIDE DIMENSIONS AT THE CENTERLINE OF THE STREAM CROSSING.

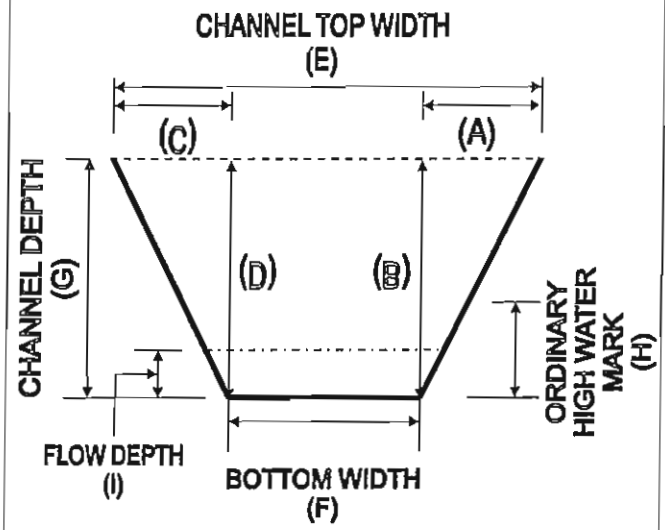

RIGHT BANK (FACE DOWNSTREAM)	HORIZONTAL (A)	0.5	FT.
	VERTICAL (B)	0.75	FT.
LEFT BANK (FACE DOWNSTREAM)	HORIZONTAL (C)	0.75	FT.
	VERTICAL (D)	0.5	FT.
CHANNEL DIMENSIONS	TOP WIDTH (E)	1.0	FT.
	BOTTOM WIDTH (F)	1.00	FT.
	OVERALL DEPTH (G)	.75	FT.
	ORDINARY HIGH WATER MARK (H)	.67	FT.
	FLOW DEPTH (I)	.10	FT.
	APPROX. SURFACE VELOCITY	<5	FT./SEC

STREAM CHARACTERIZATION

STREAM SUBSYSTEM
☐ PERENNIAL ☒ INTERMITTENT
☐ EPHEMERAL ☐ TIDAL

STREAM TYPE
☐ COLD WATER ☒ WARM WATER
CATCHMENT AREA SQ. MI.

STREAM ORIGIN
☐ GLACIAL ☒ SPRING FED
☐ NON-GLACIAL MONTANE ☐ MIXTURE OF ORIGINS
☐ SWAMP AND BOG ☒ OTHER STORMWATER

STREAM ID: S·SRC·03

PHYSICAL CHARACTERIZATION/WATER QUALITY FIELD DATA SHEET

WATERSHED FEATURES

PREDOMINANT SURROUNDING LANDUSE
- [ ] FOREST
- [ ] FIELD/PASTURE
- [ ] AGRICULTURAL
- [x] RESIDENTIAL
- [ ] COMMERCIAL
- [ ] INDUSTRIAL
- [x] OTHER: TRANSPORTATION

LOCAL WATERSHED NPS POLLUTION
- [ ] NO EVIDENCE
- [ ] SOME POTENTIAL SOURCES
- [ ] OBVIOUS SOURCES

LOCAL WATERSHED EROSION
- [ ] NONE
- [ ] MODERATE
- [ ] HEAVY

RIPARIAN VEG. (18 M. BUFFER)

INDICATE THE DOMINANT TYPE AND RECORD THE DOMINANT SPECIES PRESENT
- [ ] TREES
- [ ] SHRUBS
- [x] GRASSES
- [x] HERBACEOUS

DOMINANT SPECIES PRESENT? FESCUE SP., DANDELION

INSTREAM FEATURES

STUDY LENGTH	~300	FT.
STREAM WIDTH	2.0	FT.
STUDY REACH AREA	–	AC.
EST. DRAINAGE AREA	–	SQ. MI.
MACROINVERTEBRATES PRESENT?	[ ] YES [x] NO	
TAXA PRESENT	N/A	

CANOPY COVER
- [x] OPEN
- [ ] PARTLY OPEN
- [ ] PARTLY SHADED
- [ ] SHADED

PROPERTIES OF REACH, STREAM MORPHOLOGY TYPES
- [x] RIFFLE 100 %
- [ ] POOL %
- [ ] RUN %

CHANNELIZED [x] YES [ ] NO

DAM PRESENT [ ] YES [x] NO

LARGE WOODY DEBRIS

LWD	–	FT.^{2}
DENSITY OF LWD	–	FT.^{2}/MI.^{2}

AQUATIC VEGETATON N/A

INDICATE THE DOMINANT TYPE AND RECORD THE DOMINANT SPECIES PRESENT
- [ ] ROOTED EMERGENT
- [ ] FLOATING ALGAE
- [ ] ROOTED SUBMERGENT
- [ ] ATTACHED ALGAE
- [ ] ROOTED FLOATING
- [ ] FREE-FLOATING

DOMINANT SPECIES PRESENT

PORTION OF THE REACH WITH AQUATIC VEGETATION %

WATER QUALITY

TEMPERATURE	–	°C
SPEC. CONDUCTANCE		
DISSOLVED OXYGEN		
pH		
TURBIDITY		
WQ INSTRUMENT USED		

WATER ODORS
- [x] NORMAL/NONE
- [ ] PETROLEUM
- [ ] FISHY
- [ ] SEWAGE
- [ ] CHEMICAL
- [ ] OTHER

WATER SURFACE OILS
- [ ] SLICK
- [ ] GLOBS
- [x] NONE
- [ ] SHEEN - Oily
- [ ] FLECKS
- [ ] OTHER

TURBIDITY (IF NOT MEASURED)
- [ ] CLEAR
- [ ] TURBID
- [ ] STAINED
- [x] SLIGHTLY TURBID
- [ ] OPAQUE
- [x] OTHER: RUNOFF EVENT 24 HR.

SEDIMENT/ SUBSTRATE

ODORS
- [x] NORMAL
- [ ] SEWAGE
- [ ] PETROLEUM
- [ ] OTHER
- [ ] ANAEROBIC
- [ ] NONE
- [ ] CHEMICAL

DEPOSITS
- [ ] SLUDGE
- [ ] PAPER FIBER
- [ ] RELICT SHELLS
- [ ] OTHER
- [ ] SAWDUST
- [ ] SAND

OILS
- [x] ABSENT
- [ ] MODERATE
- [ ] SLIGHT
- [ ] PROFUSE

UNDERSIDES OF NON-EMBEDDED STONES BLACK IN COLOR?
- [ ] YES
- [x] NO

INORGANIC SUBSTRATE COMPONENTS (ADD TO 100%)			ORGANIC SUBSTRATE COMPONENTS (MAY ADD TO LESS THAN 100%)		
SUBSTRATE TYPE	DIAMETER	% COMPOSITION IN SAMPLING REACH	SUBSTRATE TYPE	CHARACTERISTIC	% COMPOSITION IN SAMPLING REACH
BEDROCK	-	–	DETRITUS	STICKS, WOOD, COARSE PLANT MATERIALS (CPOM)	–
BOULDER	256 MM (10"+)	–			
COBBLE	64 – 256 MM (2.5 – 10")	15	MUCK - MUD	BLACK, VERY FINE ORGANIC (FPOM)	–
GRAVEL	2 – 64 MM (0.1 – 2.5")	45			
SAND	0.06 -0 2 MM (GRITTY)	10			
SILT	0.004 – 0.06 MM	15	MARL	GREY, SHELL FRAGMENTS	–
CLAY	<0.004 MM (SLICK)	15			

S · SRC · 03

Riverine Assessment Form

Pennsylvania Riverine Condition Level 1 Rapid Assessment Version 1.0

For use in wadeable channels classified as intermittent or perennial

Project #	Project Name	Locality	HUC	Date	AA #	AA length
AIIJ	PTC ALLEGHENY TUNNEL			05.10.12	S·SRC·03	

Name(s) of Evaluator(s)	Steam Name and Information
SRC, KLE	S·SRC·03 UNT TO STONEY CREEK RIVER

1. RIPARIAN VEGETATION: Assess the floodplain along the entire SAR (Visual estimates of areal covergae from aerial photos with field verified acceptable).

	Conditional Category								NOTES>>
	Optimal	Suboptimal		Marginal		Poor			
Riparian Vegetation (Floodplain)	Tree stratum (dbh > 3 inches) present, with > 60% tree canopy cover. Wetlands and stream channels located within the riparian areas.	**High Suboptimal:** Riparian areas with tree stratum (dbh > 3 inches) present, with 30% to 60% tree canopy cover and containing both herbaceous and shrub layers or a non-maintained understory.	**Low Suboptimal:** Riparian areas with tree stratum (dbh > 3 inches) present, with 30% to 60% tree canopy cover and a maintained understory. Recent cutover (dense vegetation).	**High Marginal:** Non-maintained, dense herbaceous vegetation with either a shrub layer or a tree layer (dbh > 3 inches) present, with <30% tree canopy cover.	**Low Marginal:** Non-maintained, dense herbaceous vegetation, riparian areas lacking shrub and tree stratum, hay production, ponds, open water. If present, tree stratum (dbh >3 inches) present, with <30% tree canopy cover with maintained understory.	**High Poor:** Lawns, mowed, and maintained areas, nurseries, no-till cropland; actively grazed pasture, sparsely vegetated non-maintained area, recently seeded and stabilized, or other comparable condition.	**Low Poor:** Impervious surfaces, mine spoil lands, denuded surfaces, row crops, active feed lots, trails, or other comparable conditions.		
		High	Low	High	Low	High	Low		
Scores	20 19 18 17 16	15 14 13 12 11		10 9 8	7 6	5 4 3	2 1		

1. Identify Condition Category areas along the floodplain using the descriptors above.
2. Estimate the % area within each condition category. Calculators are provided for you below.
3. Enter the % Riparian Area and Score for each category in the blocks below.

Ensure the sums of % Riparian Blocks equal 100

Right Side	% Riparian Area>	1.00						100 0%		
	Score >	4						4		
									CI= Sum (Rt and Lt sub-Indexes)/2	
Left Side	% Riparian Area>	1.00						100 0%	Rt Sub-Index> 0.20 0.00	CI
	Score >	4						4	Lt Sub-Index> 0.20 0.00	0.00

0.20

2. RIPARIAN ZONE OF INFLUENCE: Assess land cover along both sides, 100 foot from edge of floodplain into the upland along the entire SAR (Visual estimates of areal covergae from aerial photos with field verified acceptable).

	Conditional Category								NOTES>>
	Optimal	Suboptimal		Marginal		Poor			
Riparian ZOI	Tree stratum (dbh > 3 inches) present, with > 60% tree canopy cover. Wetlands and stream channels located within the riparian areas.	**High Suboptimal:** Riparian areas with tree stratum (dbh > 3 inches) present, with 30% to 60% tree canopy cover and containing both herbaceous and shrub layers or a non-maintained understory.	**Low Suboptimal:** Riparian areas with tree stratum (dbh > 3 inches) present, with 30% to 60% tree canopy cover and a maintained understory. Recent cutover (dense vegetation).	**High Marginal:** Non-maintained, dense herbaceous vegetation with either a shrub layer or a tree layer (dbh > 3 inches) present, with <30% tree canopy cover.	**Low Marginal:** Non-maintained, dense herbaceous vegetation, riparian areas lacking shrub and tree stratum, hay production, ponds, open water. If present, tree stratum (dbh >3 inches) present, with <30% tree canopy cover with maintained understory.	**High Poor:** Lawns, mowed, and maintained areas, nurseries, no-till cropland; actively grazed pasture, sparsely vegetated non-maintained area, recently seeded and stabilized, or other comparable condition.	**Low Poor:** Impervious surfaces, mine spoil lands, denuded surfaces, row crops, active feed lots, trails, or other comparable conditions.		
		High	Low	High	Low	High	Low		
Score	20 19 18 17 16	15 14 13 12 11		10 9 8	7 6	5 4 3	2 1		

1. Identify Condition Category areas along each side of the Riparian ZOI using the descriptors above.
2. Estimate the % area within each condition category. Calculators are provided for you below.
3. Enter the % Riparian ZOI Area and Score for each condition category observed in the blocks below.

Ensure the sums of % Riparian ZOI Blocks equal 100

Right Side	% Riparian Area>	1.00						100 0%		
	Score >	4						4		
									CI= Sum (Rt and Lt sub-Indexes)/2	
Left Side	% Riparian Area>	1.00						100 0%	Rt Sub-Index> 0.20 0.00	CI
	Score >	4						4	Lt Sub-Index> 0.20 0.00	0.00

0.20

Comments:

ADJ. TO SR 160. MAINTAINED LAWN AREA SURROUNDS CHANNEL.

RIPARIAN ECOTONE CONDITION INDEX		RECI
NOTE: The CIs and RECI should be rounded to 2 decimal places.	THE RIPARIAN ECOTONE CONDITION INDEX (RECI) RECI = (Sum of CI's)/2	0.00

0.20

S-SRC-03 overview, facing upstream.

S-SRC-03 overview, facing downstream.

STREAM S-SRC-04

PHYSICAL CHARACTERIZATION/WATER QUALITY FIELD DATA SHEET

STREAM NAME	S-SRC-04				CLIENT	PTC
STREAM CLASS	EPHEMERAL				PROJECT	Allegheny Tunnel
INVESTIGATORS	SRC KLE	DATE	05.16.12	MM/DD/YR	LOCATION	Somerset County, PA
		TIME	08:30	24 HOUR (I.E. 16:45)		
LATITUDE		LONGITUDE			RIVER BASIN	STONYCREEK RIVER
STATION #	-	RIVERMILE		-	STORET #	

WEATHER CONDITIONS

NOW			PAST 24 HOURS
☐	STORM (HEAVY RAIN)		☐
☐	RAIN (STEADY RAIN)		☐
☐	SHOWERS (INTERMITTENT)		☒
☒	100 % CLOUD COVER	100	☒
☐	CLEAR/SUNNY		☐

HAS THERE BEEN A HEAVY RAIN IN THE LAST 7 DAYS? ☒ YES ☐ NO

AIR TEMPERATURE 45 °F

OTHER

SITE LOCATION MAP

PROVIDE A PLAN VIEW SKETCH WITH A NORTH ARROW (INDICATE DIRECTIONS OF PHOTOGRAPHS)

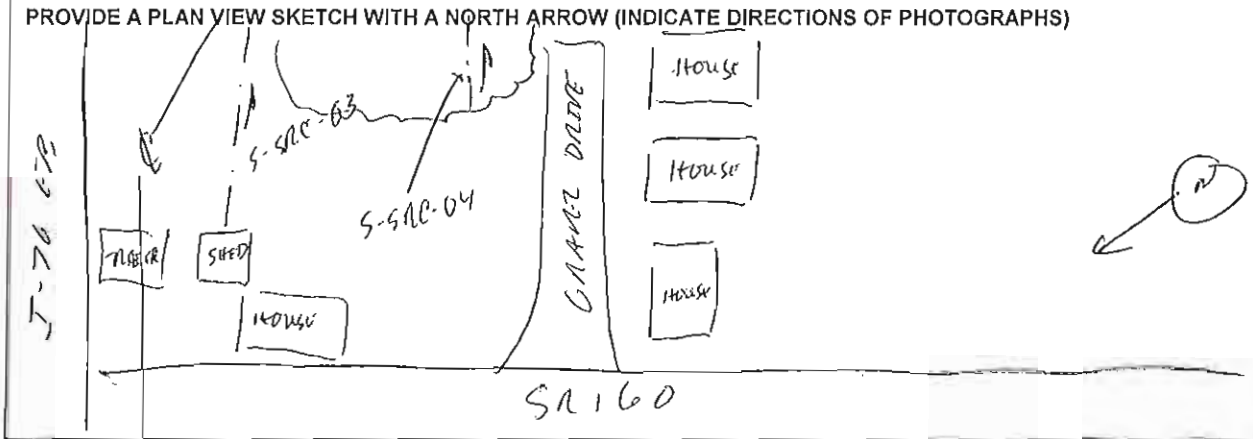

FOR LINEAR PROJECTS, PROVIDE DIMENSIONS AT THE CENTERLINE OF THE STREAM CROSSING.

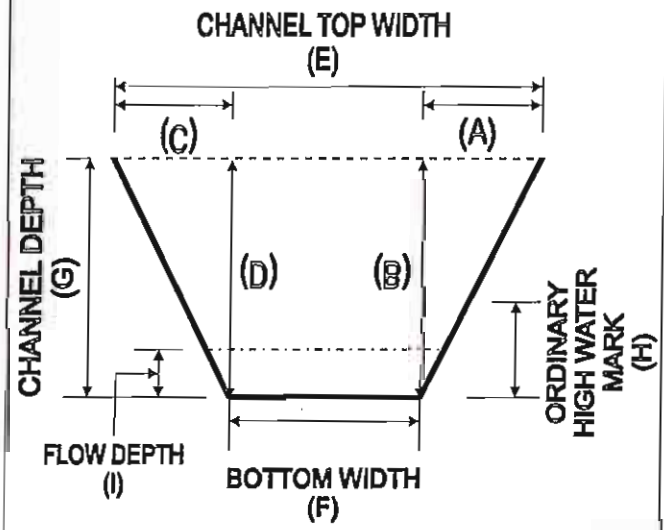

RIGHT BANK (FACE DOWNSTREAM)	HORIZONTAL (A)	0.75	FT.
	VERTICAL (B)	1.5	FT.
LEFT BANK (FACE DOWNSTREAM)	HORIZONTAL (C)	0.75	FT.
	VERTICAL (D)	1.5	FT.
CHANNEL DIMENSIONS	TOP WIDTH (E)	3.0	FT.
	BOTTOM WIDTH (F)	1.5	FT.
	OVERALL DEPTH (G)	1.0	FT.
	ORDINARY HIGH WATER MARK (H)	0.75	FT.
	FLOW DEPTH (I)	Ø	FT.
	APPROX. SURFACE VELOCITY	Ø	FT./SEC

STREAM CHARACTERIZATION

STREAM SUBSYSTEM
- ☐ PERENNIAL
- ☒ EPHEMERAL
- ☐ INTERMITTENT
- ☐ TIDAL

STREAM TYPE
- ☐ COLD WATER
- ☒ WARM WATER

CATCHMENT AREA ____ SQ. MI.

STREAM ORIGIN
- ☐ GLACIAL
- ☐ NON-GLACIAL MONTANE
- ☐ SWAMP AND BOG
- ☐ SPRING FED
- ☐ MIXTURE OF ORIGINS
- ☒ OTHER STORMWATER

STREAM ID:

PHYSICAL CHARACTERIZATION/WATER QUALITY FIELD DATA SHEET

WATERSHED FEATURES

PREDOMINANT SURROUNDING LANDUSE
- [ ] FOREST
- [x] FIELD/PASTURE
- [ ] AGRICULTURAL
- [x] RESIDENTIAL
- [ ] COMMERCIAL
- [ ] INDUSTRIAL
- [ ] OTHER

LOCAL WATERSHED NPS POLLUTION
- [ ] NO EVIDENCE
- [x] SOME POTENTIAL SOURCES
- [ ] OBVIOUS SOURCES

LOCAL WATERSHED EROSION
- [x] NONE
- [ ] MODERATE
- [ ] HEAVY

RIPARIAN VEG. (18 M. BUFFER)

INDICATE THE DOMINANT TYPE AND RECORD THE DOMINANT SPECIES PRESENT
- [ ] TREES
- [x] SHRUBS
- [x] GRASSES
- [x] HERBACEOUS

DOMINANT SPECIES PRESENT? REED CANARY, ARROW WOOD, HONEYSUCKLE

INSTREAM FEATURES

STUDY LENGTH	2300	FT.
STREAM WIDTH	3.0	FT.
STUDY REACH AREA	–	AC.
EST. DRAINAGE AREA	–	SQ. MI.
MACROINVERTEBRATES PRESENT?	[ ] YES [x] NO	
TAXA PRESENT	—	

CANOPY COVER
- [ ] OPEN
- [ ] PARTLY OPEN
- [ ] PARTLY SHADED
- [ ] SHADED

PROPERTIES OF REACH, STREAM MORPHOLOGY TYPES
- [ ] RIFFLE %
- [ ] RUN %
- [ ] POOL %
- CHANNELIZED [ ] YES [ ] NO
- DAM PRESENT [ ] YES [ ] NO

LARGE WOODY DEBRIS

LWD	—	FT.^{2}
DENSITY OF LWD	—	FT.^{2}/MI.^{2}

AQUATIC VEGETATON N/A

INDICATE THE DOMINANT TYPE AND RECORD THE DOMINANT SPECIES PRESENT
- [ ] ROOTED EMERGENT
- [ ] FLOATING ALGAE
- [ ] ROOTED SUBMERGENT
- [ ] ATTACHED ALGAE
- [ ] ROOTED FLOATING
- [ ] FREE FLOATING

DOMINANT SPECIES PRESENT

PORTION OF THE REACH WITH AQUATIC VEGETATION %

WATER QUALITY

TEMPERATURE		°C
SPEC. CONDUCTANCE		
DISSOLVED OXYGEN		
pH		
TURBIDITY		
WQ INSTRUMENT USED		

WATER ODORS
- [ ] NORMAL/NONE
- [ ] PETROLEUM
- [ ] FISHY
- [ ] SEWAGE
- [ ] CHEMICAL
- [ ] OTHER

WATER SURFACE OILS
- [ ] SLICK
- [ ] GLOBS
- [ ] NONE
- [ ] SHEEN - Oily
- [ ] FLECKS
- [ ] OTHER

TURBIDITY (IF NOT MEASURED)
- [ ] CLEAR
- [ ] TURBID
- [ ] STAINED
- [ ] SLIGHTLY TURBID
- [ ] OPAQUE
- [ ] OTHER

SEDIMENT/ SUBSTRATE

ODORS
- [x] NORMAL
- [ ] SEWAGE
- [ ] PETROLEUM
- [ ] OTHER
- [ ] ANAEROBIC
- [ ] NONE
- [ ] CHEMICAL

DEPOSITS
- [ ] SLUDGE
- [ ] PAPER FIBER
- [ ] RELICT SHELLS
- [ ] OTHER
- [ ] SAWDUST
- [ ] SAND

OILS
- [x] ABSENT
- [ ] MODERATE
- [ ] SLIGHT
- [ ] PROFUSE

UNDERSIDES OF NON-EMBEDDED STONES BLACK IN COLOR?
- [ ] YES
- [x] NO

INORGANIC SUBSTRATE COMPONENTS (ADD TO 100%)			ORGANIC SUBSTRATE COMPONENTS (MAY ADD TO LESS THAN 100%)		
SUBSTRATE TYPE	DIAMETER	% COMPOSITION IN SAMPLING REACH	SUBSTRATE TYPE	CHARACTERISTIC	% COMPOSITION IN SAMPLING REACH
BEDROCK	-	—	DETRITUS	STICKS, WOOD, COARSE PLANT MATERIALS (CPOM)	80
BOULDER	256 MM (10"+)	—			
COBBLE	64 – 256 MM (2.5 – 10")	—	MUCK - MUD	BLACK, VERY FINE ORGANIC (FPOM)	
GRAVEL	2 – 64 MM (0.1 – 2.5")	—			
SAND	0.06 -0 2 MM (GRITTY)	—			
SILT	0.004 – 0.06 MM	30	MARL	GREY, SHELL FRAGMENTS	
CLAY	<0.004 MM (SLICK)	70			

S-SAC-04

Riverine Assessment Form

Pennsylvania Riverine Condition Level 1 Rapid Assessment Version 1.0

For use in wadeable channels classified as intermittent or perennial

Project #	Project Name	Locality	HUC	Date	AA #	AA length
A11J	PTC ALLEGHENY TUNNEL			05.10.12	S-SAC-04	

Name(s) of Evaluator(s)	Steam Name and Information
SAC, KLE	S-SAC-04 UNT TO STONEY CREEK RIVER

1. RIPARIAN VEGETATION: Assess the floodplain along the entire SAR (Visual estimates of areal covergae from aerial photos with field verified acceptable).

	Conditional Category								NOTES>>
	Optimal	Suboptimal		Marginal		Poor			
Riparian Vegetation (Floodplain)	Tree stratum (dbh > 3 inches) present, with > 60% tree canopy cover. Wetlands and stream channels located within the riparian areas.	**High Suboptimal:** Riparian areas with tree stratum (dbh > 3 inches) present, with 30% to 60% tree canopy cover and containing both herbaceous and shrub layers or a non-maintained understory.	**Low Suboptimal:** Riparian areas with tree stratum (dbh > 3 inches) present, with 30% to 60% tree canopy cover and a maintained understory. Recent cutover (dense vegetation).	**High Marginal:** Non-maintained, dense herbaceous vegetation with either a shrub layer or a tree layer (dbh > 3 inches) present, with <30% tree canopy cover.	**Low Marginal:** Non-maintained, dense herbaceous vegetation, riparian areas lacking shrub and tree stratum, hay production, ponds, open water. If present, tree stratum (dbh >3 inches) present, with <30% tree canopy cover with maintained understory.	**High Poor:** Lawns, mowed, and maintained areas, nurseries; no-till cropland; actively grazed pasture, sparsely vegetated non-maintained area, recently seeded and stabilized, or other comparable condition.	**Low Poor:** Impervious surfaces, mine spoil lands, denuded surfaces, row crops, active feed lots, trails, or other comparable conditions.		
		High	Low	High	Low	High	Low		
Scores	20 19 18 17 16	15 14	13 12 11	10 9 8	7 6	5 4 3	2 1		

1. Identify Condition Category areas along the floodplain using the descriptors above.
2. Estimate the % area within each condition category. Calculators are provided for you below.
3. Enter the % Riparian Area and Score for each category in the blocks below.

Ensure the sums of % Riparian Blocks equal 100

Right Side	% Riparian Area>	1.00						100 0%		
	Score >	9						9		
									CI= Sum (Rt and Lt sub-Indexes)/2	
Left Side	% Riparian Area>	1.00						100 0%	Rt Sub-Index> 0.45 0.00	CI
	Score >	9						9	Lt Sub-Index> 0.45 0.00	0.00

0.45

2. RIPARIAN ZONE OF INFLUENCE: Assess land cover along both sides, 100 foot from edge of floodplain into the upland along the entire SAR (Visual estimates of areal covergae from aerial photos with field verified acceptable).

	Conditional Category								NOTES>>
	Optimal	Suboptimal		Marginal		Poor			
Riparian ZOI	Tree stratum (dbh > 3 inches) present, with > 60% tree canopy cover. Wetlands and stream channels located within the riparian areas.	**High Suboptimal:** Riparian areas with tree stratum (dbh > 3 inches) present, with 30% to 60% tree canopy cover and containing both herbaceous and shrub layers or a non-maintained understory.	**Low Suboptimal:** Riparian areas with tree stratum (dbh > 3 inches) present, with 30% to 60% tree canopy cover and a maintained understory. Recent cutover (dense vegetation).	**High Marginal:** Non-maintained, dense herbaceous vegetation with either a shrub layer or a tree layer (dbh > 3 inches) present, with <30% tree canopy cover.	**Low Marginal:** Non-maintained, dense herbaceous vegetation, riparian areas lacking shrub and tree stratum, hay production, ponds, open water. If present, tree stratum (dbh >3 inches) present, with <30% tree canopy cover with maintained understory.	**High Poor:** Lawns, mowed, and maintained areas, nurseries; no-till cropland; actively grazed pasture, sparsely vegetated non-maintained area, recently seeded and stabilized, or other comparable condition.	**Low Poor:** Impervious surfaces, mine spoil lands, denuded surfaces, row crops, active feed lots, trails, or other comparable conditions.		
		High	Low	High	Low	High	Low		
Score	20 19 18 17 16	15 14	13 12 11	10 9 8	7 6	5 4 3	2 1		

1. Identify Condition Category areas along each side of the Riparian ZOI using the descriptors above.
2. Estimate the % area within each condition category. Calculators are provided for you below.
3. Enter the % Riparian ZOI Area and Score for each condition category observed in the blocks below.

Ensure the sums of % Riparian ZOI Blocks equal 100

Right Side	% Riparian Area>	1.00						100 0%		
	Score >	9						9		
									CI= Sum (Rt and Lt sub-Indexes)/2	
Left Side	% Riparian Area>	1.00						100 0%	Rt Sub-Index> 0.45 0.00	CI
	Score >	9						9	Lt Sub-Index> 0.45 0.00	0.00

0.45

Comments:

LOCATED W/IN PSS PORTION OF WETLAND W-01

RIPARIAN ECOTONE CONDITION INDEX		RECI
NOTE: **The CIs and RECI should be rounded to 2 decimal places.**	**THE RIPARIAN ECOTONE CONDITION INDEX (RECI) RECI = (Sum of CI's)/2**	0.00

0.45

S-SRC-04 overview, facing upstream.

S-SRC-04 overview, facing downstream.

STREAM S-SRC-05

PHYSICAL CHARACTERIZATION/WATER QUALITY FIELD DATA SHEET

STREAM NAME	S-SRC-05				CLIENT	PTC
STREAM CLASS	PERENNIAL				PROJECT	Allegheny Tunnel
INVESTIGATORS	SRC ILE	DATE	05.15.12	MM/DD/YR	LOCATION	Somerset County, PA
		TIME	10:45	24 HOUR (I.E. 16:45)		
LATITUDE		LONGITUDE			RIVER BASIN	STONY CREEK RIVER
STATION #	-	RIVERMILE		-	STORET #	-

WEATHER CONDITIONS

NOW			PAST 24 HOURS
☐	STORM (HEAVY RAIN)		☐
☐	RAIN (STEADY RAIN)		☐
☐	SHOWERS (INTERMITTENT)		☒
☒ 100	% CLOUD COVER	100	☒
☐	CLEAR/SUNNY		☐

HAS THERE BEEN A HEAVY RAIN IN THE LAST 7 DAYS? ☒ YES ☐ NO

AIR TEMPERATURE 65 °F

OTHER

SITE LOCATION MAP

PROVIDE A PLAN VIEW SKETCH WITH A NORTH ARROW (INDICATE DIRECTIONS OF PHOTOGRAPHS)

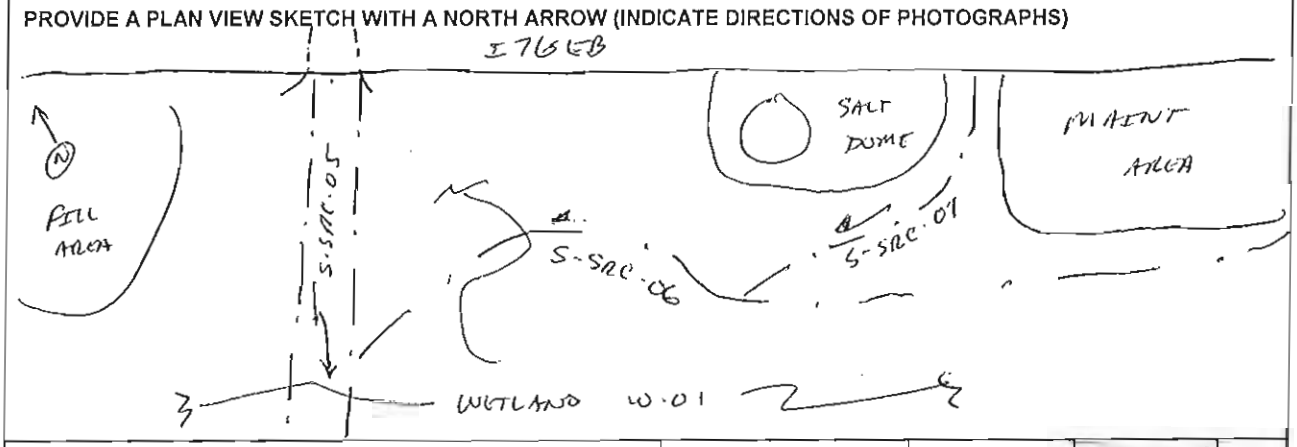

FOR LINEAR PROJECTS, PROVIDE DIMENSIONS AT THE CENTERLINE OF THE STREAM CROSSING.

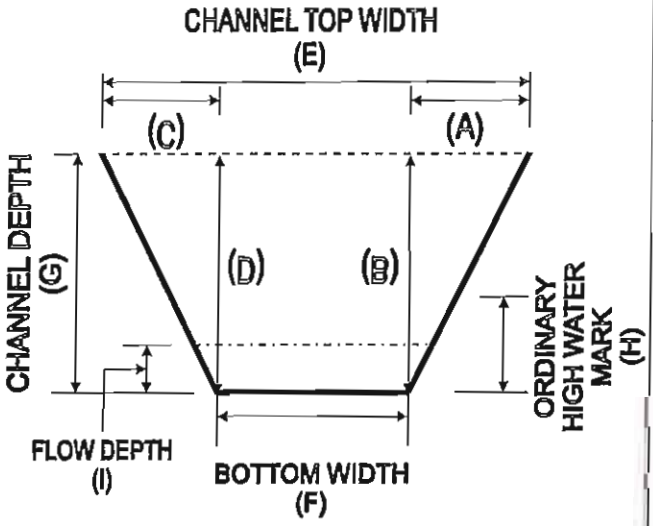

RIGHT BANK (FACE DOWNSTREAM)	HORIZONTAL (A)	4.0	FT.
	VERTICAL (B)	3.5	FT.
LEFT BANK (FACE DOWNSTREAM)	HORIZONTAL (C)	3.0	FT.
	VERTICAL (D)	3.5	FT.
CHANNEL DIMENSIONS	TOP WIDTH (E)	15.0	FT.
	BOTTOM WIDTH (F)	8.0	FT.
	OVERALL DEPTH (G)	3.5	FT.
	ORDINARY HIGH WATER MARK (H)	2.75	FT.
	FLOW DEPTH (I)	1.75	FT.
	APPROX. SURFACE VELOCITY	10-20	FT./SEC

STREAM CHARACTERIZATION

STREAM SUBSYSTEM
- ☒ PERENNIAL
- ☐ EPHEMERAL
- ☐ INTERMITTENT
- ☐ TIDAL

STREAM TYPE
- ☐ COLD WATER
- ☒ WARM WATER

CATCHMENT AREA ____ SQ. MI.

STREAM ORIGIN
- ☐ GLACIAL
- ☐ NON-GLACIAL MONTANE
- ☐ SWAMP AND BOG
- ☒ SPRING FED
- ☒ MIXTURE OF ORIGINS
- ☒ OTHER STORMWATER

STREAM ID: S. SRC. 05

PHYSICAL CHARACTERIZATION/WATER QUALITY FIELD DATA SHEET

WATERSHED FEATURES

PREDOMINANT SURROUNDING LANDUSE
- [x] FOREST
- [ ] FIELD/PASTURE
- [ ] AGRICULTURAL
- [ ] RESIDENTIAL
- [ ] COMMERCIAL
- [x] INDUSTRIAL
- [x] OTHER TRANSPORTATION

LOCAL WATERSHED NPS POLLUTION
- [ ] NO EVIDENCE
- [x] SOME POTENTIAL SOURCES
- [ ] OBVIOUS SOURCES

LOCAL WATERSHED EROSION
- [ ] NONE
- [x] MODERATE
- [ ] HEAVY

RIPARIAN VEG. (18 M. BUFFER)

INDICATE THE DOMINANT TYPE AND RECORD THE DOMINANT SPECIES PRESENT
- [ ] TREES
- [x] SHRUBS
- [ ] GRASSES
- [ ] HERBACEOUS

DOMINANT SPECIES PRESENT? ARROWWOOD

INSTREAM FEATURES

STUDY LENGTH	400	FT.
STREAM WIDTH	15	FT.
STUDY REACH AREA	–	AC.
EST. DRAINAGE AREA	–	SQ. MI.
MACROINVERTEBRATES PRESENT?	[x] YES [ ] NO	

TAXA PRESENT: CADDIS, MAYFLY

CANOPY COVER
- [ ] OPEN
- [ ] PARTLY OPEN
- [ ] PARTLY SHADED
- [x] SHADED

PROPERTIES OF REACH, STREAM MORPHOLOGY TYPES
- [x] RIFFLE 30 %
- [x] RUN 40 %
- [x] POOL 30 %

CHANNELIZED [ ] YES [x] NO

DAM PRESENT [ ] YES [x] NO

LARGE WOODY DEBRIS

LWD	–	FT.^{2}
DENSITY OF LWD	–	FT.^{2}/MI.^{2}

AQUATIC VEGETATON

INDICATE THE DOMINANT TYPE AND RECORD THE DOMINANT SPECIES PRESENT
- [x] ROOTED EMERGENT
- [ ] FLOATING ALGAE
- [ ] ROOTED SUBMERGENT
- [x] ATTACHED ALGAE
- [ ] ROOTED FLOATING
- [ ] FREE FLOATING

DOMINANT SPECIES PRESENT: GREEN ALGAE, CARDX SP.

PORTION OF THE REACH WITH AQUATIC VEGETATION: 30 %

WATER QUALITY

TEMPERATURE		°C
SPEC. CONDUCTANCE		
DISSOLVED OXYGEN		
pH		
TURBIDITY		

WQ INSTRUMENT USED

WATER ODORS
- [x] NORMAL/NONE
- [ ] PETROLEUM
- [ ] FISHY
- [ ] SEWAGE
- [ ] CHEMICAL
- [ ] OTHER

WATER SURFACE OILS
- [ ] SLICK
- [ ] GLOBS
- [x] NONE
- [ ] SHEEN - Oily
- [ ] FLECKS
- [ ] OTHER

TURBIDITY (IF NOT MEASURED)
- [ ] CLEAR
- [ ] TURBID
- [ ] STAINED
- [x] SLIGHTLY TURBID
- [ ] OPAQUE
- [ ] OTHER

SEDIMENT/ SUBSTRATE

ODORS
- [x] NORMAL
- [ ] SEWAGE
- [ ] PETROLEUM
- [ ] OTHER
- [ ] ANAEROBIC
- [ ] NONE
- [ ] CHEMICAL

DEPOSITS
- [ ] ~~SLUDGE~~
- [ ] PAPER FIBER
- [ ] RELICT SHELLS
- [ ] OTHER
- [ ] SAWDUST
- [ ] SAND

OILS
- [x] ABSENT
- [ ] MODERATE
- [ ] SLIGHT
- [ ] PROFUSE

UNDERSIDES OF NON-EMBEDDED STONES BLACK IN COLOR?
- [ ] YES
- [x] NO

INORGANIC SUBSTRATE COMPONENTS (ADD TO 100%)			ORGANIC SUBSTRATE COMPONENTS (MAY ADD TO LESS THAN 100%)		
SUBSTRATE TYPE	DIAMETER	% COMPOSITION IN SAMPLING REACH	SUBSTRATE TYPE	CHARACTERISTIC	% COMPOSITION IN SAMPLING REACH
BEDROCK	-	–	DETRITUS	STICKS, WOOD, COARSE PLANT MATERIALS (CPOM)	40
BOULDER	256 MM (10"+)	–			
COBBLE	64 – 256 MM (2.5 – 10")	–	MUCK - MUD	BLACK, VERY FINE ORGANIC (FPOM)	–
GRAVEL	2 – 64 MM (0.1 – 2.5")	20			
SAND	0.06 -0 2 MM (GRITTY)	–			
SILT	0.004 – 0.06 MM	80	MARL	GREY, SHELL FRAGMENTS	–
CLAY	<0.004 MM (SLICK)	–			

S-SRC-05

Riverine Assessment Form

Pennsylvania Riverine Condition Level 1 Rapid Assessment Version 1.0

For use in wadeable channels classified as intermittent or perennial

Project #	Project Name	Locality	HUC	Date	AA #	AA length
AIJ	PTC ALLEGHENY TUNNEL			05.15.12	S-SRC-05	

Name(s) of Evaluator(s)	Steam Name and Information
SRC, KLE	S-SRC-05 UNT TO STONEY CREEK RIVER

1. RIPARIAN VEGETATION: Assess the floodplain along the entire SAR (Visual estimates of areal covergae from aerial photos with field verified acceptable).

	Conditional Category								NOTES>>
	Optimal	Suboptimal		Marginal		Poor			
Riparian Vegetation (Floodplain)	Tree stratum (dbh > 3 inches) present, with > 60% tree canopy cover. Wetlands and stream channels located within the riparian areas.	High Suboptimal: Riparian areas with tree stratum (dbh > 3 inches) present, with 30% to 60% tree canopy cover and containing both herbaceous and shrub layers or a non-maintained understory.	Low Suboptimal: Riparian areas with tree stratum (dbh > 3 inches) present, with 30% to 60% tree canopy cover and a maintained understory. Recent cutover (dense vegetation).	High Marginal: Non-maintained, dense herbaceous vegetation with either a shrub layer or a tree layer (dbh > 3 inches) present, with <30% tree canopy cover.	Low Marginal: Non-maintained, dense herbaceous vegetation, riparian areas lacking shrub and tree stratum, hay production, ponds, open water. If present, tree stratum (dbh >3 inches) present, with <30% tree canopy cover with maintained understory.	High Poor: Lawns, mowed, and maintained areas, nurseries; no-till cropland; actively grazed pasture, sparsely vegetated non-maintained area, recently seeded and stabilized, or other comparable condition.	Low Poor: Impervious surfaces, mine spoil lands, denuded surfaces, row crops, active feed lots, trails, or other comparable conditions.		
		High	Low	High	Low	High	Low		
Scores	20 19 18 17 16	15 14	13 12 11	10 9 8	7 6	5 4 3	2 1		

1. Identify Condition Category areas along the floodplain using the descriptors above.
2. Estimate the % area within each condition category. Calculators are provided for you below.
3. Enter the % Riparian Area and Score for each category in the blocks below.

Ensure the sums of % Riparian Blocks equal 100

Right Side	% Riparian Area>	1.00						100 %		
	Score >	10						10		
									CI= Sum (Rt and Lt sub-Indexes)/2	
Left Side	% Riparian Area>	0.80	0.20					100 %	Rt Sub-Index> 0.50 0.80	CI
	Score >	10	8					9.6	Lt Sub-Index> 0.48 0.80	0.90

0.49

2. RIPARIAN ZONE OF INFLUENCE: Assess land cover along both sides, 100 foot from edge of floodplain into the upland along the entire SAR (Visual estimates of areal covergae from aerial photos with field verified acceptable).

	Conditional Category								NOTES>>
	Optimal	Suboptimal		Marginal		Poor			
Riparian ZOI	Tree stratum (dbh > 3 inches) present, with > 60% tree canopy cover. Wetlands and stream channels located within the riparian areas.	High Suboptimal: Riparian areas with tree stratum (dbh > 3 inches) present, with 30% to 60% tree canopy cover and containing both herbaceous and shrub layers or a non-maintained understory.	Low Suboptimal: Riparian areas with tree stratum (dbh > 3 inches) present, with 30% to 60% tree canopy cover and a maintained understory. Recent cutover (dense vegetation).	High Marginal: Non-maintained, dense herbaceous vegetation with either a shrub layer or a tree layer (dbh > 3 inches) present, with <30% tree canopy cover.	Low Marginal: Non-maintained, dense herbaceous vegetation, riparian areas lacking shrub and tree stratum, hay production, ponds, open water. If present, tree stratum (dbh >3 inches) present, with <30% tree canopy cover with maintained understory.	High Poor: Lawns, mowed, and maintained areas, nurseries; no-till cropland; actively grazed pasture, sparsely vegetated non-maintained area, recently seeded and stabilized, or other comparable condition.	Low Poor: Impervious surfaces, mine spoil lands, denuded surfaces, row crops, active feed lots, trails, or other comparable conditions.		
		High	Low	High	Low	High	Low		
Score	20 19 18 17 16	15 14	13 12 11	10 9 8	7 6	5 4 3	2 1		

1. Identify Condition Category areas along each side of the Riparian ZOI using the descriptors above.
2. Estimate the % area within each condition category. Calculators are provided for you below.
3. Enter the % Riparian ZOI Area and Score for each condition category observed in the blocks below.

Ensure the sums of % Riparian ZOI Blocks equal 100

Right Side	% Riparian Area>	0.90	0.10					100 %		
	Score >	10	8					9.8		
									CI= Sum (Rt and Lt sub-Indexes)/2	
Left Side	% Riparian Area>	0.70	0.30					100 %	Rt Sub-Index> 0.49 0.80	CI
	Score >	10	8					9.4	Lt Sub-Index> 0.47 0.80	0.80

0.48

Comments:

PORTION OF AA IS CHANNEL SOUTH OF I76 (NORTHERN PORTION PREVIOUSLY ASSESSED AS STREAM S-SRC-01).

RIPARIAN ECOTONE CONDITION INDEX		RECI
NOTE: The CIs and RECI should be rounded to 2 decimal places.	THE RIPARIAN ECOTONE CONDITION INDEX (RECI) RECI = (Sum of CI's)/2	0.80

0.49

S-SRC-05 overview, facing upstream.

S-SRC-05 overview, facing downstream.

STREAM S-SRC-06

PHYSICAL CHARACTERIZATION/WATER QUALITY FIELD DATA SHEET

STREAM NAME	S-SRC-06				CLIENT	PTC
STREAM CLASS	PERENNIAL				PROJECT	Allegheny Tunnel
INVESTIGATORS	SRC KLE	DATE	05.15.12	MM/DD/YR	LOCATION	Somerset County, PA
		TIME	10:30	24 HOUR (I.E. 16:45)		
LATITUDE		LONGITUDE			RIVER BASIN	STONYCREEK RIVER
STATION #	-	RIVERMILE		-	STORET #	

WEATHER CONDITIONS

NOW		PAST 24 HOURS
☐	STORM (HEAVY RAIN)	☐
☐	RAIN (STEADY RAIN)	☐
☐	SHOWERS (INTERMITTENT)	☒
☒ 100	% CLOUD COVER	100 ☒
☐	CLEAR/SUNNY	☐

HAS THERE BEEN A HEAVY RAIN IN THE LAST 7 DAYS? ☒ YES ☐ NO

AIR TEMPERATURE 65 °F

OTHER

SITE LOCATION MAP

PROVIDE A PLAN VIEW SKETCH WITH A NORTH ARROW (INDICATE DIRECTIONS OF PHOTOGRAPHS)

Refer to sketch for S-SRC-05.

FOR LINEAR PROJECTS, PROVIDE DIMENSIONS AT THE CENTERLINE OF THE STREAM CROSSING.

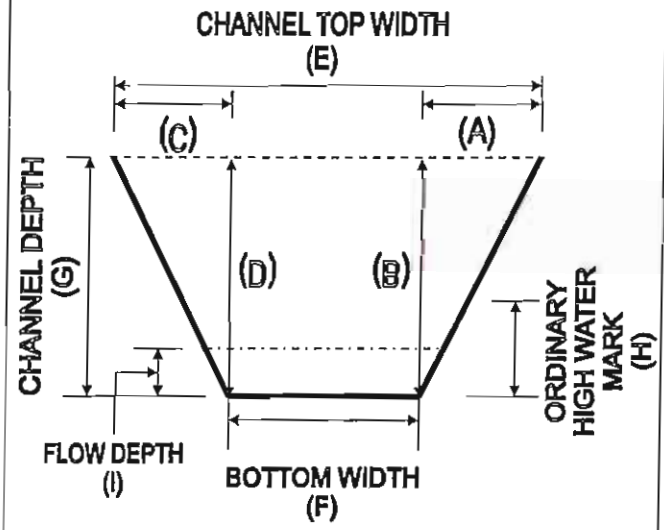

RIGHT BANK (FACE DOWNSTREAM)	HORIZONTAL (A)	2.0	FT.
	VERTICAL (B)	1.0	FT.
LEFT BANK (FACE DOWNSTREAM)	HORIZONTAL (C)	1.5	FT.
	VERTICAL (D)	2.5	FT.
CHANNEL DIMENSIONS	TOP WIDTH (E)	10	FT.
	BOTTOM WIDTH (F)	6.5	FT.
	OVERALL DEPTH (G)	2.5	FT.
	ORDINARY HIGH WATER MARK (H)	1.0	FT.
	FLOW DEPTH (I)	0.5	FT.
	APPROX. SURFACE VELOCITY	10-20	FT./SEC

STREAM CHARACTERIZATION

STREAM SUBSYSTEM
☒ PERENNIAL ☐ INTERMITTENT
☐ EPHEMERAL ☐ TIDAL

STREAM TYPE
☐ COLD WATER ☒ WARM WATER
CATCHMENT AREA SQ. MI.

STREAM ORIGIN
☐ GLACIAL ☐ SPRING FED
☐ NON-GLACIAL MONTANE ☒ MIXTURE OF ORIGINS
☐ SWAMP AND BOG ☒ OTHER STORM WATER

STREAM ID: S. SRC - 06

PHYSICAL CHARACTERIZATION/WATER QUALITY FIELD DATA SHEET

WATERSHED FEATURES

PREDOMINANT SURROUNDING LANDUSE: [X] FOREST [ ] COMMERCIAL [ ] FIELD/PASTURE [X] INDUSTRIAL [ ] AGRICULTURAL [X] OTHER [ ] RESIDENTIAL TRANSMISSION

LOCAL WATERSHED NPS POLLUTION: [ ] NO EVIDENCE [X] SOME POTENTIAL SOURCES [ ] OBVIOUS SOURCES

LOCAL WATERSHED EROSION: [ ] NONE [X] MODERATE [ ] HEAVY

RIPARIAN VEG. (18 M. BUFFER)

INDICATE THE DOMINANT TYPE AND RECORD THE DOMINANT SPECIES PRESENT: [X] TREES [X] SHRUBS [ ] GRASSES [ ] HERBACEOUS

DOMINANT SPECIES PRESENT? BL. CHERRY, ARROW WOOD

INSTREAM FEATURES

STUDY LENGTH: 200 FT.

STREAM WIDTH: 10.0 FT.

STUDY REACH AREA: — AC.

EST. DRAINAGE AREA: — SQ. MI.

MACROINVERTEBRATES PRESENT?: [X] YES [ ] NO

TAXA PRESENT: CADDIS & MAYFLY

CANOPY COVER: [ ] OPEN [ ] PARTLY OPEN [ ] PARTLY SHADED [X] SHADED

PROPERTIES OF REACH, STREAM MORPHOLOGY TYPES: [X] RIFFLE 80 % [ ] RUN % [X] POOL 20 %

CHANNELIZED: [ ] YES [X] NO

DAM PRESENT: [ ] YES [X] NO

LARGE WOODY DEBRIS

LWD: — FT.^{2}

DENSITY OF LWD: — FT.^{2}/MI.^{2}

AQUATIC VEGETATON

INDICATE THE DOMINANT TYPE AND RECORD THE DOMINANT SPECIES PRESENT: [ ] ROOTED EMERGENT [ ] ROOTED SUBMERGENT [ ] ROOTED FLOATING [ ] FLOATING ALGAE [ ] ATTACHED ALGAE [ ] FREE FLOATING

DOMINANT SPECIES PRESENT

PORTION OF THE REACH WITH AQUATIC VEGETATION %

WATER QUALITY

TEMPERATURE °C

SPEC. CONDUCTANCE

DISSOLVED OXYGEN

pH

TURBIDITY

WQ INSTRUMENT USED

WATER ODORS: [X] NORMAL/NONE [ ] SEWAGE [ ] PETROLEUM [ ] CHEMICAL [ ] FISHY [ ] OTHER

WATER SURFACE OILS: [ ] SLICK [ ] SHEEN - Oily [ ] GLOBS [ ] FLECKS [X] NONE [ ] OTHER

TURBIDITY (IF NOT MEASURED): [ ] CLEAR [X] SLIGHTLY TURBID [ ] TURBID [ ] OPAQUE [ ] STAINED [ ] OTHER

SEDIMENT/ SUBSTRATE

ODORS: [X] NORMAL [ ] ANAEROBIC [ ] SEWAGE [ ] NONE [ ] PETROLEUM [ ] CHEMICAL [ ] OTHER

DEPOSITS: [ ] SLUDGE [ ] SAWDUST [ ] PAPER FIBER [ ] SAND [ ] RELICT SHELLS [ ] OTHER

OILS: [X] ABSENT [ ] SLIGHT [ ] MODERATE [ ] PROFUSE

UNDERSIDES OF NON-EMBEDDED STONES BLACK IN COLOR? [ ] YES [ ] NO

INORGANIC SUBSTRATE COMPONENTS (ADD TO 100%)			ORGANIC SUBSTRATE COMPONENTS (MAY ADD TO LESS THAN 100%)		
SUBSTRATE TYPE	DIAMETER	% COMPOSITION IN SAMPLING REACH	SUBSTRATE TYPE	CHARACTERISTIC	% COMPOSITION IN SAMPLING REACH
BEDROCK	-	—	DETRITUS	STICKS, WOOD, COARSE PLANT MATERIALS (CPOM)	33
BOULDER	256 MM (10"+)	—			
COBBLE	64 – 256 MM (2.5 – 10")	—	MUCK - MUD	BLACK, VERY FINE ORGANIC (FPOM)	—
GRAVEL	2 – 64 MM (0.1 – 2.5")	20			
SAND	0.06 -0 2 MM (GRITTY)	—			
SILT	0.004 – 0.06 MM	20	MARL	GREY, SHELL FRAGMENTS	—
CLAY	<0.004 MM (SLICK)	—			

S · SRC · 06

Riverine Assessment Form

Pennsylvania Riverine Condition Level 1 Rapid Assessment Version 1.0

For use in wadeable channels classified as intermittent or perennial

Project #	Project Name	Locality	HUC	Date	AA #	AA length
A115	PTC ALLEGHENY TUNNEL			05.15.12	S·SRC·06	

Name(s) of Evaluator(s)	Steam Name and Information
SRC, ILE	S · SRC · 06 UNT TO STONEY CREEK RIVER

1. RIPARIAN VEGETATION: Assess the floodplain along the entire SAR (Visual estimates of areal covergae from aerial photos with field verified acceptable).

	Conditional Category							NOTES>>
	Optimal	Suboptimal		Marginal		Poor		
Riparian Vegetation (Floodplain)	Tree stratum (dbh > 3 inches) present, with > 60% tree canopy cover. Wetlands and stream channels located within the riparian areas.	**High Suboptimal:** Riparian areas with tree stratum (dbh > 3 inches) present, with 30% to 60% tree canopy cover and containing both herbaceous and shrub layers or a non-maintained understory	**Low Suboptimal:** Riparian areas with tree stratum (dbh > 3 inches) present, with 30% to 60% tree canopy cover and a maintained understory. Recent cutover (dense vegetation).	**High Marginal:** Non-maintained, dense herbaceous vegetation with either a shrub layer or a tree layer (dbh > 3 inches) present, with <30% tree canopy cover.	**Low Marginal:** Non-maintained, dense herbaceous vegetation, riparian areas lacking shrub and tree stratum, hay production, ponds, open water. If present, tree stratum (dbh >3 inches) present, with <30% tree canopy cover with maintained understory.	**High Poor:** Lawns, mowed, and maintained areas, nurseries, no-till cropland; actively grazed pasture, sparsely vegetated non-maintained area, recently seeded and stabilized, or other comparable condition.	**Low Poor:** Impervious surfaces, mine spoil lands, denuded surfaces, row crops, active feed lots, trails, or other comparable conditions.	
		High	Low	High	Low	High	Low	
Scores	20 19 18 17 16	15 14 13 12 11		10 9 8	7 6	5 4 3	2 1	

1. Identify Condition Category areas along the floodplain using the descriptors above.
2. Estimate the % area within each condition category. Calculators are provided for you below.
3. Enter the % Riparian Area and Score for each category in the blocks below.

Ensure the sums of % Riparian Blocks equal 100

Right Side	% Riparian Area>	1.00						100 %	
	Score >	12						12	
									CI= Sum (Rt and Lt sub-Indexes)/2
Left Side	% Riparian Area>	1.00						100 %	Rt Sub-Index> 0.60 0.00 / CI
	Score >	12						12	Lt Sub-Index> 0.60 0.00 / 0.00

0.60

2. RIPARIAN ZONE OF INFLUENCE: Assess land cover along both sides, 100 foot from edge of floodplain into the upland along the entire SAR (Visual estimates of areal covergae from aerial photos with field verified acceptable).

	Conditional Category							NOTES>>
	Optimal	Suboptimal		Marginal		Poor		
Riparian ZOI	Tree stratum (dbh > 3 inches) present, with > 60% tree canopy cover. Wetlands and stream channels located within the riparian areas.	**High Suboptimal:** Riparian areas with tree stratum (dbh > 3 inches) present, with 30% to 60% tree canopy cover and containing both herbaceous and shrub layers or a non-maintained understory	**Low Suboptimal:** Riparian areas with tree stratum (dbh > 3 inches) present, with 30% to 60% tree canopy cover and a maintained understory. Recent cutover (dense vegetation).	**High Marginal:** Non-maintained, dense herbaceous vegetation with either a shrub layer or a tree layer (dbh > 3 inches) present, with <30% tree canopy cover.	**Low Marginal:** Non-maintained, dense herbaceous vegetation, riparian areas lacking shrub and tree stratum, hay production, ponds, open water. If present, tree stratum (dbh >3 inches) present, with <30% tree canopy cover with maintained understory.	**High Poor:** Lawns, mowed, and maintained areas, nurseries, no-till cropland; actively grazed pasture, sparsely vegetated non-maintained area, recently seeded and stabilized, or other comparable condition.	**Low Poor:** Impervious surfaces, mine spoil lands, denuded surfaces, row crops, active feed lots, trails, or other comparable conditions.	
		High	Low	High	Low	High	Low	
Score	20 19 18 17 16	15 14 13 12 11		10 9 8	7 6	5 4 3	2 1	

1. Identify Condition Category areas along each side of the Riparian ZOI using the descriptors above.
2. Estimate the % area within each condition category. Calculators are provided for you below.
3. Enter the % Riparian ZOI Area and Score for each condition category observed in the blocks below.

Ensure the sums of % Riparian ZOI Blocks equal 100

Right Side	% Riparian Area>	0.90	0.10					100%	
	Score >	12	5					11.3	
									CI= Sum (Rt and Lt sub-Indexes)/2
Left Side	% Riparian Area>	0.60	0.40					100%	Rt Sub-Index> 0.55 0.00 / CI
	Score >	11	5					8.6	Lt Sub-Index> 0.43 0.00 / 0.00

0.50

Comments:

STREAM FLOWS BETWEEN I-76 EASTBOUND AND ELECTRICAL POWERLINE ROW.

RIPARIAN ECOTONE CONDITION INDEX		RECI
NOTE: **The CIs and RECI should be rounded to 2 decimal places.**	**THE RIPARIAN ECOTONE CONDITION INDEX (RECI) RECI = (Sum of CI's)/2**	0.00

0.55

S-SRC-06 overview, facing upstream.

S-SRC-06 overview, facing downstream.

STREAM S-SRC-07

PHYSICAL CHARACTERIZATION/WATER QUALITY FIELD DATA SHEET

STREAM NAME	S-SRC-07			CLIENT	PTC
STREAM CLASS	PERENNIAL			PROJECT	Allegheny Tunnel
INVESTIGATORS	SRC ILLC	DATE 05.15.12	MM/DD/YR	LOCATION	Somerset County, PA
		TIME 10:15	24 HOUR (I.E. 16:45)		
LATITUDE		LONGITUDE		RIVER BASIN	STONY CREEK RIVER
STATION #	-	RIVERMILE	-	STORET #	

WEATHER CONDITIONS	NOW		PAST 24 HOURS
	☐	STORM (HEAVY RAIN)	☐
	☐	RAIN (STEADY RAIN)	☐
	☐	SHOWERS (INTERMITTENT)	☐
	☒ 100	% CLOUD COVER 100	☒
	☐	CLEAR/SUNNY	☐

HAS THERE BEEN A HEAVY RAIN IN THE LAST 7 DAYS? ☒ YES ☐ NO

AIR TEMPERATURE 65 °F

OTHER

SITE LOCATION MAP

PROVIDE A PLAN VIEW SKETCH WITH A NORTH ARROW (INDICATE DIRECTIONS OF PHOTOGRAPHS)

Refer to S-SRC-05

FOR LINEAR PROJECTS, PROVIDE DIMENSIONS AT THE CENTERLINE OF THE STREAM CROSSING.

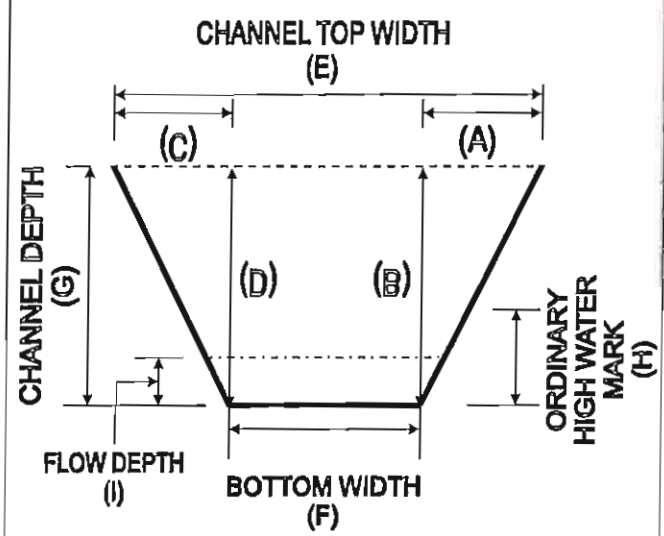

RIGHT BANK (FACE DOWNSTREAM)	HORIZONTAL (A)	1.5	FT.
	VERTICAL (B)	1.0	FT.
LEFT BANK (FACE DOWNSTREAM)	HORIZONTAL (C)	1.5	FT.
	VERTICAL (D)	1.0	FT.
CHANNEL DIMENSIONS	TOP WIDTH (E)	10.0	FT.
	BOTTOM WIDTH (F)	7.0	FT.
	OVERALL DEPTH (G)	1.0	FT.
	ORDINARY HIGH WATER MARK (H)	0.75	FT.
	FLOW DEPTH (I)	0.33	FT.
	APPROX. SURFACE VELOCITY	<5	FT./SEC

STREAM CHARACTERIZATION

STREAM SUBSYSTEM
☒ PERENNIAL ☐ INTERMITTENT
☐ EPHEMERAL ☐ TIDAL

STREAM TYPE
☐ COLD WATER ☒ WARM WATER
CATCHMENT AREA SQ. MI.

STREAM ORIGIN
☐ GLACIAL ☐ SPRING FED
☐ NON-GLACIAL MONTANE ☒ MIXTURE OF ORIGINS
☐ SWAMP AND BOG ☒ OTHER BTO RUNOFF

STREAM ID: S-SRC-07

PHYSICAL CHARACTERIZATION/WATER QUALITY FIELD DATA SHEET

WATERSHED FEATURES

PREDOMINANT SURROUNDING LANDUSE

- [ ] FOREST
- [ ] FIELD/PASTURE
- [ ] AGRICULTURAL
- [ ] RESIDENTIAL
- [ ] COMMERCIAL
- [x] INDUSTRIAL
- [x] OTHER TRANSPORTATION

LOCAL WATERSHED NPS POLLUTION

- [ ] NO EVIDENCE
- [x] SOME POTENTIAL SOURCES
- [ ] OBVIOUS SOURCES

LOCAL WATERSHED EROSION

- [ ] NONE
- [ ] MODERATE
- [x] HEAVY

RIPARIAN VEG. (18 M. BUFFER)

INDICATE THE DOMINANT TYPE AND RECORD THE DOMINANT SPECIES PRESENT

- [ ] TREES
- [ ] SHRUBS
- [x] GRASSES
- [x] HERBACEOUS

DOMINANT SPECIES PRESENT? CAREX SP., GRASSES

INSTREAM FEATURES

STUDY LENGTH	1200	FT.
STREAM WIDTH	10	FT.
STUDY REACH AREA	—	AC.
EST. DRAINAGE AREA	—	SQ. MI.
MACROINVERTEBRATES PRESENT?	[x] YES / [ ] NO	

TAXA PRESENT: PLANARIA, 10 SNAILS

CANOPY COVER

OPEN	PARTLY OPEN	PARTLY SHADED	SHADED
[x]	[ ]	[ ]	[ ]

PROPERTIES OF REACH, STREAM MORPHOLOGY TYPES

- [x] RIFFLE 20 %
- [x] POOL 80 %
- [ ] RUN %

CHANNELIZED: [x] YES [ ] NO

DAM PRESENT: [ ] YES [x] NO

LARGE WOODY DEBRIS

LWD	—	FT.^{2}
DENSITY OF LWD	—	FT.^{2}/MI.^{2}

AQUATIC VEGETATON

INDICATE THE DOMINANT TYPE AND RECORD THE DOMINANT SPECIES PRESENT

- [x] ROOTED EMERGENT
- [ ] FLOATING ALGAE
- [ ] ROOTED SUBMERGENT
- [x] ATTACHED ALGAE
- [ ] ROOTED FLOATING
- [ ] FREE FLOATING

DOMINANT SPECIES PRESENT: BROWN ALGAE, CATTAILS

PORTION OF THE REACH WITH AQUATIC VEGETATION: 20 %

WATER QUALITY

TEMPERATURE		°C
SPEC. CONDUCTANCE		
DISSOLVED OXYGEN		
pH		
TURBIDITY		
WQ INSTRUMENT USED		

WATER ODORS

- [ ] NORMAL/NONE
- [ ] PETROLEUM
- [ ] FISHY
- [ ] SEWAGE
- [ ] CHEMICAL
- [x] OTHER AMD

WATER SURFACE OILS

- [ ] SLICK
- [ ] GLOBS
- [x] NONE
- [ ] SHEEN - Oily
- [ ] FLECKS
- [ ] OTHER

TURBIDITY (IF NOT MEASURED)

- [ ] CLEAR
- [ ] TURBID
- [ ] STAINED
- [x] SLIGHTLY TURBID
- [ ] OPAQUE
- [ ] OTHER

SEDIMENT/ SUBSTRATE

ODORS

- [ ] NORMAL
- [ ] SEWAGE
- [ ] PETROLEUM
- [x] OTHER AMD
- [x] ANAEROBIC
- [ ] NONE
- [ ] CHEMICAL

OILS

- [x] ABSENT
- [ ] MODERATE
- [ ] SLIGHT
- [ ] PROFUSE

DEPOSITS

- [ ] SLUDGE
- [ ] PAPER FIBER
- [ ] RELICT SHELLS
- [x] OTHER IRON PRECIPITATE
- [ ] SAWDUST
- [ ] SAND

UNDERSIDES OF NON-EMBEDDED STONES BLACK IN COLOR?

- [ ] YES
- [x] NO

INORGANIC SUBSTRATE COMPONENTS (ADD TO 100%)			ORGANIC SUBSTRATE COMPONENTS (MAY ADD TO LESS THAN 100%)		
SUBSTRATE TYPE	DIAMETER	% COMPOSITION IN SAMPLING REACH	SUBSTRATE TYPE	CHARACTERISTIC	% COMPOSITION IN SAMPLING REACH
BEDROCK	-	—	DETRITUS	STICKS, WOOD, COARSE PLANT MATERIALS (CPOM)	—
BOULDER	256 MM (10"+)	—			
COBBLE	64 – 256 MM (2.5 – 10")	—	MUCK - MUD	BLACK, VERY FINE ORGANIC (FPOM)	—
GRAVEL	2 – 64 MM (0.1 – 2.5")	10			
SAND	0.06 -0 2 MM (GRITTY)	—			
SILT	0.004 – 0.06 MM	90	MARL	GREY, SHELL FRAGMENTS	—
CLAY	<0.004 MM (SLICK)	—			

S · SRC · 07

Riverine Assessment Form

Pennsylvania Riverine Condition Level 1 Rapid Assessment Version 1.0

For use in wadeable channels classified as intermittent or perennial

Project #	Project Name	Locality	HUC	Date	AA #	AA length
AIIJ	PTC ALLEGHENY TUNNEL			05.15.12	S·SRC·07	

Name(s) of Evaluator(s)	Steam Name and Information
SRC, KLE	S·SRC·07 UNT TO STONEY CREEK RIVER

1. RIPARIAN VEGETATION: Assess the floodplain along the entire SAR (Visual estimates of areal covergae from aerial photos with field verified acceptable).

Conditional Category	Optimal	Suboptimal		Marginal		Poor		NOTES>>
Riparian Vegetation (Floodplain)	Tree stratum (dbh > 3 inches) present, with > 60% tree canopy cover. Wetlands and stream channels located within the riparian areas.	**High Suboptimal:** Riparian areas with tree stratum (dbh > 3 inches) present, with 30% to 60% tree canopy cover and containing both herbaceous and shrub layers or a non-maintained understory.	**Low Suboptimal:** Riparian areas with tree stratum (dbh > 3 inches) present, with 30% to 60% tree canopy cover and a maintained understory. Recent cutover (dense vegetation).	**High Marginal:** Non-maintained, dense herbaceous vegetation with either a shrub layer or a tree layer (dbh > 3 inches) present, with <30% tree canopy cover.	**Low Marginal:** Non-maintained, dense herbaceous vegetation, riparian areas lacking shrub and tree stratum, hay production, ponds, open water. If present, tree stratum (dbh >3 inches) present, with <30% tree canopy cover with maintained understory.	**High Poor:** Lawns, mowed, and maintained areas, nurseries; no-till cropland; actively grazed pasture, sparsely vegetated non-maintained area, recently seeded and stabilized, or other comparable condition.	**Low Poor:** Impervious surfaces, mine spoil lands, denuded surfaces, row crops, active feed lots, trails, or other comparable conditions.	
		High	Low	High	Low	High	Low	
Scores	20 19 18 17 16	15 14 13 12 11		10 9 8	7 6	5 4 3	2 1	

1. Identify Condition Category areas along the floodplain using the descriptors above.
2. Estimate the % area within each condition category. Calculators are provided for you below.
3. Enter the % Riparian Area and Score for each category in the blocks below.

Ensure the sums of % Riparian Blocks equal 100

Right Side	% Riparian Area>	0.90	0.10					100 %		
	Score >	2	5					2.3		
									CI= Sum (Rt and Lt sub-Indexes)/2	
Left Side	% Riparian Area>	0.90	0.10					100 %	Rt Sub-Index> 0.115 0.00	CI
	Score >	2	5					2.3	Lt Sub-Index> 0.115 0.00	0.00

0.12

2. RIPARIAN ZONE OF INFLUENCE: Assess land cover along both sides, 100 foot from edge of floodplain into the upland along the entire SAR (Visual estimates of areal covergae from aerial photos with field verified acceptable).

Conditional Category	Optimal	Suboptimal		Marginal		Poor		NOTES>>
Riparian ZOI	Tree stratum (dbh > 3 inches) present, with > 60% tree canopy cover. Wetlands and stream channels located within the riparian areas.	**High Suboptimal:** Riparian areas with tree stratum (dbh > 3 inches) present, with 30% to 60% tree canopy cover and containing both herbaceous and shrub layers or a non-maintained understory.	**Low Suboptimal:** Riparian areas with tree stratum (dbh > 3 inches) present, with 30% to 60% tree canopy cover and a maintained understory. Recent cutover (dense vegetation).	**High Marginal:** Non-maintained, dense herbaceous vegetation with either a shrub layer or a tree layer (dbh > 3 inches) present, with <30% tree canopy cover.	**Low Marginal:** Non-maintained, dense herbaceous vegetation, riparian areas lacking shrub and tree stratum, hay production, ponds, open water. If present, tree stratum (dbh >3 inches) present, with <30% tree canopy cover with maintained understory.	**High Poor:** Lawns, mowed, and maintained areas, nurseries; no-till cropland; actively grazed pasture, sparsely vegetated non-maintained area, recently seeded and stabilized, or other comparable condition.	**Low Poor:** Impervious surfaces, mine spoil lands, denuded surfaces, row crops, active feed lots, trails, or other comparable conditions.	
		High	Low	High	Low	High	Low	
Score	20 19 18 17 16	15 14 13 12 11		10 9 8	7 6	5 4 3	2 1	

1. Identify Condition Category areas along each side of the Riparian ZOI using the descriptors above.
2. Estimate the % area within each condition category. Calculators are provided for you below.
3. Enter the % Riparian ZOI Area and Score for each condition category observed in the blocks below.

Ensure the sums of % Riparian ZOI Blocks equal 100

Right Side	% Riparian Area>	0.90	0.10					100 %		
	Score >	1	4					1.3		
									CI= Sum (Rt and Lt sub-Indexes)/2	
Left Side	% Riparian Area>	0.90	0.10					100 %	Rt Sub-Index> 0.005 0.00	CI
	Score >	1	4					1.3	Lt Sub-Index> 0.005 0.00	0.00

0.07

Comments:

STREAM ORIGINATES @ I-76 EB AND FLOWS BETWEEN SALT SHED AND DRIVER TRAINING LOT.

RIPARIAN ECOTONE CONDITION INDEX		RECI
NOTE: **The CIs and RECI should be rounded to 2 decimal places.**	**THE RIPARIAN ECOTONE CONDITION INDEX (RECI) RECI = (Sum of CI's)/2**	0.00

0.09

S-SRC-07 overview, facing upstream.

S-SRC-07 overview, facing downstream.

STREAM S-SRC-08